Senticon
SENTIENT CONTROL SOLUTIONS

Technical Data Sheet PS2.01
xCR10/11/12/13/14/15

PS2.01 TCR/QCR10, TCR/QCR11, TCR/QCR12, TCR/QCR13, TCR/QCR14, TCR/QCR15 Series Touchscreen Room Controllers

The TCR/QCR Series Controllers have been designed to be wall mounted universal temperature, air quality, humidity controllers in room spaces. The controllers are suitable for a wide range of applications and have pre-defined application logic that covers most room control heating and cooling systems such as fan coil units, chilled ceilings, zone heating etc.

The xCR10 and xCR11 series controllers are wall surface mounted. xCR12, xCR13, xCR14 and xCR15 series controllers are SlimLine flush mounted to standard wall mounting boxes with additional inputs/outputs.

xCR14 and xCR15 Series controllers have 230V power supply, so they are ideal for applications where 24V is not available.

The room controllers are typically supplied with a sharp colour touchscreen display with glass front that provides intuitive user interface. An optional PIR sensor is available. The controllers have built-in Modbus RTU or BACnet MS/TP communication that allow interaction to the BMS systems. Optional Bluetooth wireless interface provides Smart Phone App interface (iOS). LoraWan option allows integration wirelessly to the LoraWan systems.

Features

- Advanced Room Controllers for wide variety of room control applications.
- Multi- and Single Stage PI Control Loops provide accurate control of Temperature, Humidity, CO2, VOC/TVOC or combination of them with high/low limit, summer/winter change-over, dew point, maximum demand etc. functions
- BACnet MS/TP and Modbus RS485 RTU with up to 60V industrial isolation on RS485 for system integration
- Optional LoraWan® long-range wireless communication interface
- 2.4" Colour Touchscreen for Indications, User Actions and Alarms. Blank version available for discreet installations
- QCR Models have Built-in CO2 Measurement and Control
- 2x Universal inputs (temperature/0-10V/digital) offer application flexibility
- xCR10, xCR12 and xCR15 Models have 4x Analogue 0..10Vdc Outputs
- xCR11 Models have 1x Analogue 0..10Vdc Output and 4 x 24Vac Triacs
- xCR12 Models have 2 x 24Vac Triacs

- xCDR13 Models have 2 x 24Vac Triacs and 3 x 230Vac rated 5A relays (for fan control)
- xCR14 Models have 3x Analogue 0..10Vdc Outputs and 1x 230V relay output (7A res.)
- Configuration wirelessly through Smart Config Windows Software or Smart Phone iOS App (via Built-In Bluetooth or using Bluetooth Dongles). SmartView SmartPhone App for device interrogation for end users.
- Built-in extension timer / boost button (TS models)
- Optional 24V pilot relay (RL-option) with xCR10 and xCR12 versions
- Available in both White and Black. The display has number of different skin colour options for customisation.
- User display language customisable using the language packs

Technical Specifications

Power Supply:	Power:	xCR10: 24Vac/dc -10%/+15%, max 80mA with display xCR11: 24Vac/dc -10%/+15%, max 80mA with display xCR12: 24Vac/dc -10%/+15%, max 80mA with display xCR13: 24Vac/dc -10%/+15%, max 80mA with display Note: Triacs required 24Vac to operate xCR14/xCR15: 90-250VAC 50/60Hz, 0.15A
Measurements:	Temperature (All Models)	
	Range:	0..50° (32..122°F)
	Accuracy:	+/-0.5°C (xCR11 +/-1.0°C)
	CO2 (QCR Models)	
	Range:	0..10,000ppm
	Accuracy:	+/-30ppm + 3% of the reading
	Humidity (Option)	
	Range:	0..100%rH
	Accuracy:	+/-2%rH (within 20 to 80%rH)
	VOC/TVOC (Volatile Organic Compound) (Option)	
	Range:	0..500 (Air Quality Index) 0..5842 ug/m^3 (WELL Building Standard® Mølhave Index) 0..5842 ug/m^3 (RESET® Air Isobutylylene Index)
	PIR Movement (Option)	
	Type/Range:	Passive Infrared Movement Detection, Range up to 5m
Inputs:	Universal Inputs:	2 x Universal Inputs - RI/AI/DI Application Selected RI = NTC10 Measurement RI = Resistive kOhms Measurement, 0.1..500kOhms, Accuracy: 0.1+/-1% kOhms of the reading (1..80kOhms), resolution 0.1 kOhms AI = 0..10Vdc Input, display resolution 0.1 Volts DI = Digital Volt-Free Input Note: xCR14 has only 1 x UI
Outputs:	Analogue Outputs:	xCR10/xCR12/xCR15: 4 x 0..10Vdc, min. load resistance >5 kOhms (max. 2mA @ 10V) xCR11/xCR13: 1 x 0-.10Vdc, min. load resistance >5 kOhms (max. 2mA @ 10V) xCR14: 3 x 0..10Vdc, min. load resistance >5 kOhms (max. 2mA @ 10V)
	Digital Outputs:	xCR11: 4 x 24Vac Rated Triacs, Switching to 0V, Max 1A load xCR12/xCR13: 2 x 24Vac Rated Triacs, Switching to 0V, Max 1A load (for thermic wax actuators or 3-point raise/lower actuators - max. 3 thermic actuators per triac)
	Relay Outputs:	xCR10 (RL Option): 1 x 24V Pilot Relay, max 0.5A xCR12 (RL Option): 1 x 24V Pilot Relay, max 0.5A. Note: Replaces Triacs (D1 & D2) xCR13: 3 x 230Vac, max 5A (res.) xCR14: 1 x 230Va, max 7A (res.)
Communication:	Physical Interface	1 x RS485 driver with up to 60V industrial Isolation, recommended max 63 devices
	Protocol:	Modbus RTU or BACnet MS/TP (order relevant model)
	Addressing:	Via Bitswitch: 1..127 (xCR10 and xCR11 only) Via Software: 1..247 for Modbus, 1..127 for BACnet MS/TP Via Touchscreen (TS-models): 1..247 for Modbus, 1..127 for BACnet MS/TP
	Settings:	Baud Rate: 9600/19200/38400/76800 (bitswitch), 57600/115200 (software) Modbus Parity: None/Even/Odd, Modbus Stop Bits: 1 or 2 (Default: 9600/None/1)
Wireless Interface:	Bluetooth (Option):	Bluetooth Low Energy - iOS Smart Phone App Interface
	LoraWan (Option):	LoraWan® Wireless Interface (EU868, other bands available on request) Encrypted LoraWan® 1.0.3 Class C Device with secure OTAA activation with IPEX antenna for long-range communication.
Display:	Option	Optional 2.4" Full Colour Display with Glass Overlay, 240 x 320px
Mechanical:	Wiring Terminals:	Rising Cage Screw Terminals, 0.2 to 2.5mm^2 / 26 to 12 AWG
	Enclosure:	ABS ULV0 Plastics - White or Black
	Protection Class:	IP30 (when mounted on a wall or a junction box)
	Mounting:	xCR10/xCR11: Wall or Junction Box Mounting (60mm screw distance) xCR12/xCR13/xCR14/xCR15: Junction Box Mounting (60mm screw distance)
	Dimensions	xCR10/XCR11: W86 x H86 x D24mm xCR12/xCR13/xCR14/xCR15: W86 x H86 x D14mm (Surface Part) W86 x H86 x D39mm (Total)
Country of Origin:		United Kingdom

Model Selection

Refer to the below table to select the required model. The part number offers descriptive method for the product and options selection, and the SKU# number provides unique reference number. It is possible to order products using either.

Part Number		SKU# Number						
Example	QCR10-BAC-TS-OE-W	5000	2	02	03	00	0	2
Product Name		Product			Product Options			
TCR10	Room Temperature Controller, 2UI, 4AO, 24V Supply	5000						
QCR10	Room Temperature and CO2 Controller, 2UI, 4AO, 24V Supply	5100						
TCR11	Room Temperature Controller, 2UI, 4DO, 1AO, 24V Supply	5200						
QCR11	Room Temperature and CO2 Controller, 2UI, 4DO, 1AO, 24V Supply	5300						
TCR12	SlimLine Room Temperature Controller, 2UI, 4AO, 2DO, 24V Supply	5400						
QCR12	SlimLine Room Temperature and CO2 Controller, 2UI, 4AO, 2DO, 24V Supply	5500						
TCR13	SlimLine Room Temperature Controller, 2UI, 2DO, 3RO (230V), 1AO, 24V Supply	5600						
QCR13	SlimLine Room Temperature and CO2 Controller, 2UI, 2DO, 3RO (230V), 1AO, 24V Supply	5650						
TCR14	SlimLine Room Temperature Controller, 1UI, 3AO, 1RO (230V), 90-250Vac Supply	5700						
QCR14	SlimLine Room Temperature and CO2 Controller, 1UI, 3AO, 1RO (230V), 90-250Vac Supply	5750						
TCR15	SlimLine Room Temperature Controller, 2UI, 4AO, 90-250Vac Supply	5800						
QCR15	SlimLine Room Temperature and CO2 Controller, 2UI, 4AO, 90-250Vac Supply	5850						
Serial Communication Option								
MOD	Modbus RS485		1					
BAC	BACnet MS/TP		2					
Interface and Wireless Options								
	No Interface			00				
TS	Colour Capacitive Touchscreen			02				
BLE	Bluetooth App Interface			03				
TS-BLE	Touchscreen and Bluetooth			05				
LRA	LoraWan Wireless Interface			06				
TS-LRA	LoraWan Wireless Interface with Touchscreen			08				
Measurement Options								
	No Extra Measurements				00			
RH	Relative Humidity				01			
RH-VOC	Volatile Organic Compound and Humidity				02			
OE	Passive Infrared Movement (PIR)				03			
RH-OE	Relative Humidity and Movement (PIR)				04			
RH-VOC-OE	VOC, Relative Humidity and Movement (PIR)				05			
Output Options								
	No Output Options					00		
RL	24V Relay Output (Only for TC10/QCR10/TCR12/QCR12) *1					01		
Region (LoraWan)								
	Non Lora or EU868MHz LoraWan						0	
US	US915MHz LoraWan						1	
AS	AS923MHz LoraWan						2	
IN	IN815MHz LoraWan						3	
Colour Options								
B	Black							1
W	White							2

Note 1. RL-option only available for xCR10 and xCR12 Series. With xCR12 series RL replaces triacs (D1 & D2). xCR13 and xCR14 have built-in 230V relays.

Wiring Connections

TCR10/QCR10 CONTROLLER WIRING

The diagram below illustrates the wiring connections to the controllers.

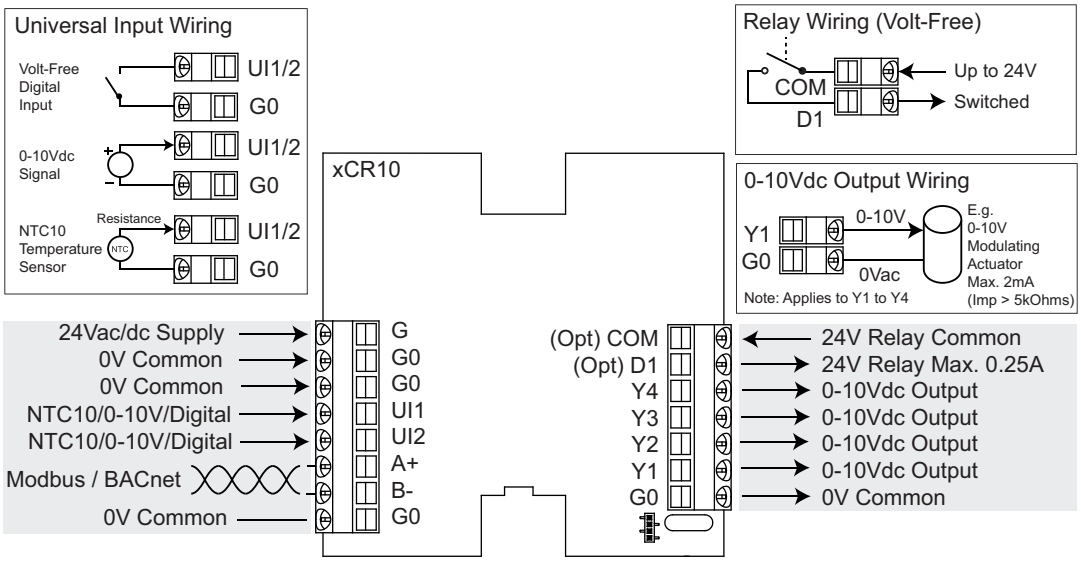

QCR10/TCR10 WIRING TERMINATIONS

Terminal	Description
G	24Vac/dc -10/+15% Supply
G0	0V Common
UI1	NTC10/0-10V/Volt-Free Digital Input 1
UI2	NTC10/0-10V/Volt-Free Digital Input 2
A+	Modbus / BACnet RS485 A+
B-	Modbus / BACnet RS485 B-
G0	0V Common

Terminal	Description
COM	24V Relay Common (Option)
D1	24V Relay Max 0.25A (Option)
Y4	0-10Vdc Output max. 2mA (Default: CO2 Control)
Y3	0-10Vdc Output max. 2mA (Default: EC Fan Speed)
Y2	0-10Vdc Output max. 2mA (Default: Cooling Stage 1)
Y1	0-10Vdc Output max. 2mA (Default: Heating Stage 1)
G0	0V Common

TCR11/QCR11 CONTROLLER WIRING

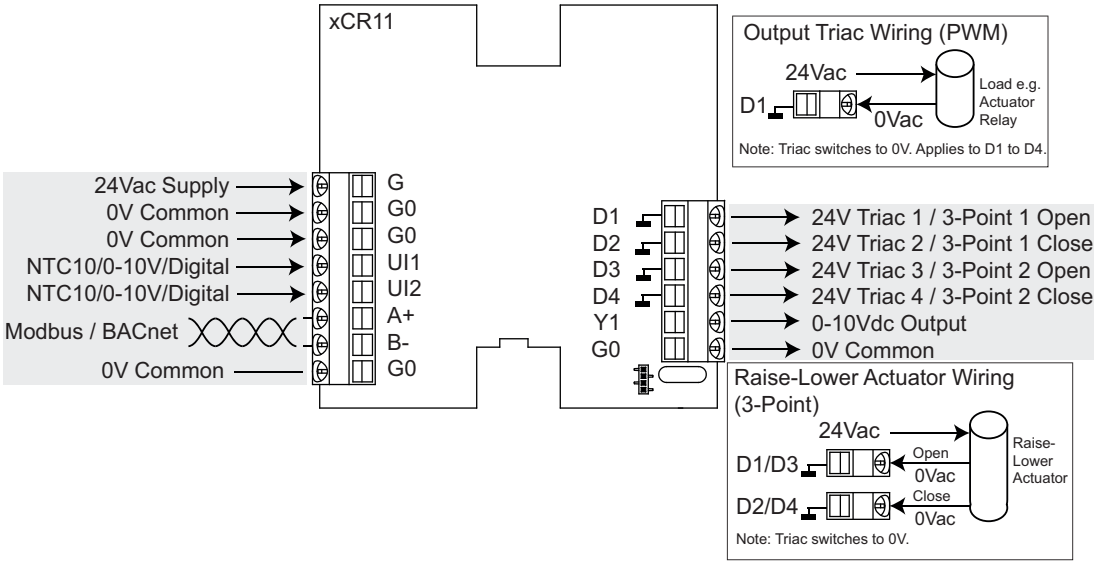

QCR11/TCR11 WIRING TERMINATIONS

Terminal	Description
G	24Vac -10/+15% Supply
G0	0V Common
UI1	NTC10/0-10V/Volt-Free Digital Input 1
UI2	NTC10/0-10V/Volt-Free Digital Input 2
A+	Modbus / BACnet RS485 A+
B-	Modbus / BACnet RS485 B-
G0	0V Common

Terminal	Description
COM	Not Applicable
D1	24Vac Triac, Max 1A (Default: Heating Stage 1)
D2	24Vac Triac, Max 1A (Default: Cooling Stage 1)
D3	24Vac Triac, Max 1A (Default: Heating Stage 2)
D4	24Vac Triac, Max 1A (Default: Cooling Stage 1)
Y1	0-10Vdc Output max. 2mA
G0	0V Common

TCR12/QCR12 CONTROLLER WIRING

xCR12 series controllers are flush mounted to junction box. The diagrams below illustrate the wiring.

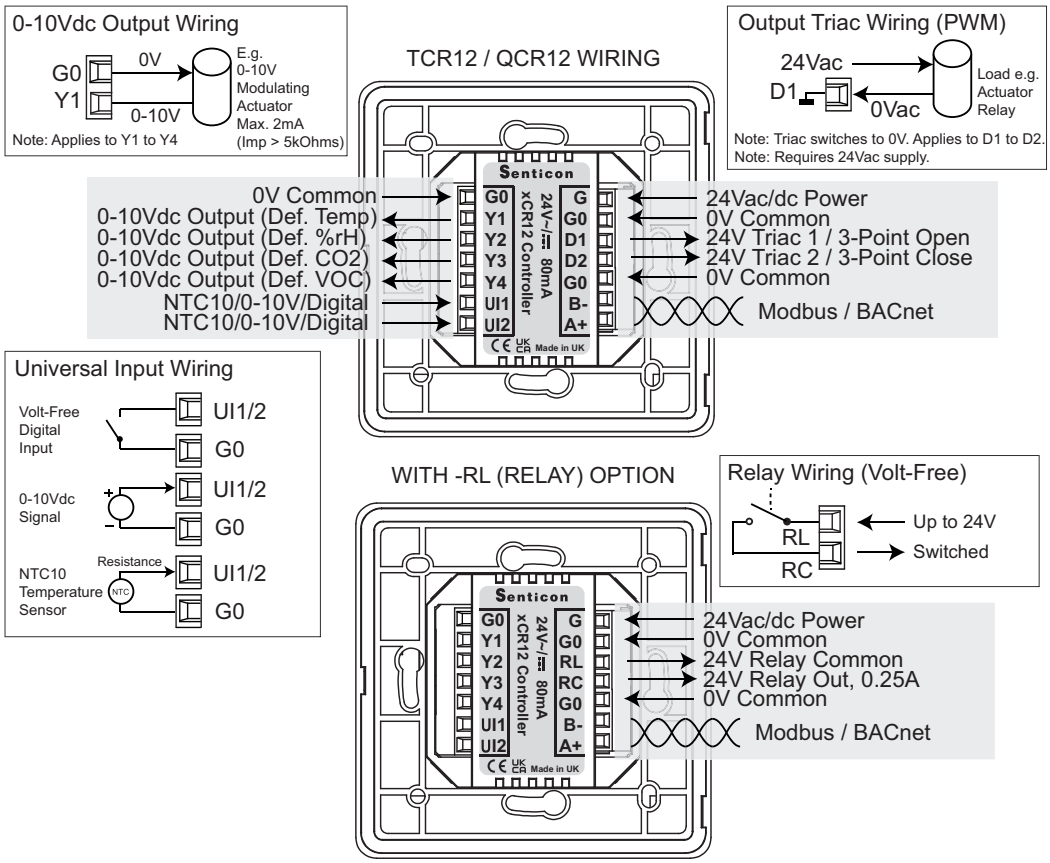

Terminal	Description
G0	0V Common
Y1	0-10Vdc Output 1, max. 2mA (Default: Heating Stage 1)
Y2	0-10Vdc Output 2, max. 2mA (Default: Cooling Stage 1)
Y3	0-10Vdc Output 3, max. 2mA (Default: EC Fan Speed)
Y4	0-10Vdc Output 4, max. 2mA (Default: CO2 Control)
UI1	NTC10/0-10V/Volt-Free Digital Input 1
UI2	NTC10/0-10V/Volt-Free Digital Input 2

Terminal	Description
G	24Vac/dc -10/+15% Supply Note: Triacs need 24Vac
G0	0V Common
D1 RL	24Vac Triac, Max 1A 24V Relay (RL-option)
D2 RC	24Vac Triac, Max 1A 24V Relay Common (RL-option)
G0	0V Common
B-	Modbus / BACnet RS485 B-
A+	Modbus / BACnet RS485 A+

TCR13/QCR13 CONTROLLER WIRING

xCR13 series controllers are flush mounted to junction box. The diagram below illustrates the wiring.

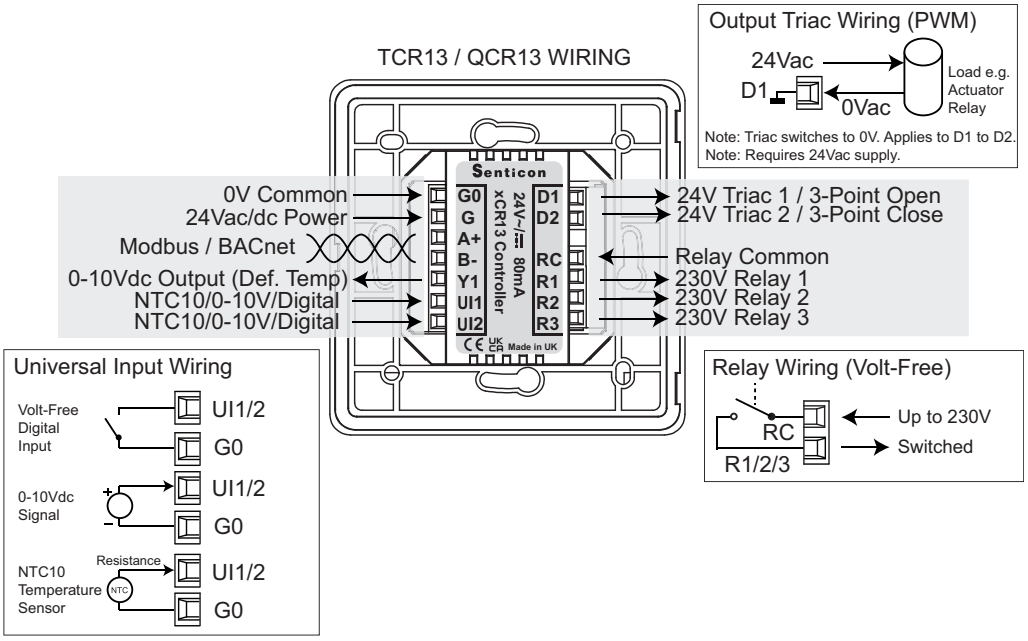

Terminal	Description
G0	0V Common
G	24Vac/dc -10/+15% Supply Note: Triacs need 24Vac
A+	Modbus / BACnet RS485 A+
B-	Modbus / BACnet RS485 B-
Y1	0-10Vdc Output 1, max. 2mA (Default: Heating Stage 1)
UI1	NTC10/0-10V/Volt-Free Digital Input 1
UI2	NTC10/0-10V/Volt-Free Digital Input 2

Terminal	Description
D1	24Vac Triac, Max 1A
D2	24Vac Triac, Max 1A
RC	Relay Common, max. 230Vac, 5A
R1	Relay 1 (Fan Speed 1), 230Vac, 5A
R2	Relay 2 (Fan Speed 2), 230Vac, 5A
R3	Relay 3 (Fan Speed 3), 230Vac, 5A

TCR14/QCR14 CONTROLLER WIRING

xCR14 series controllers are flush mounted to junction box. The diagram below illustrates the wiring.

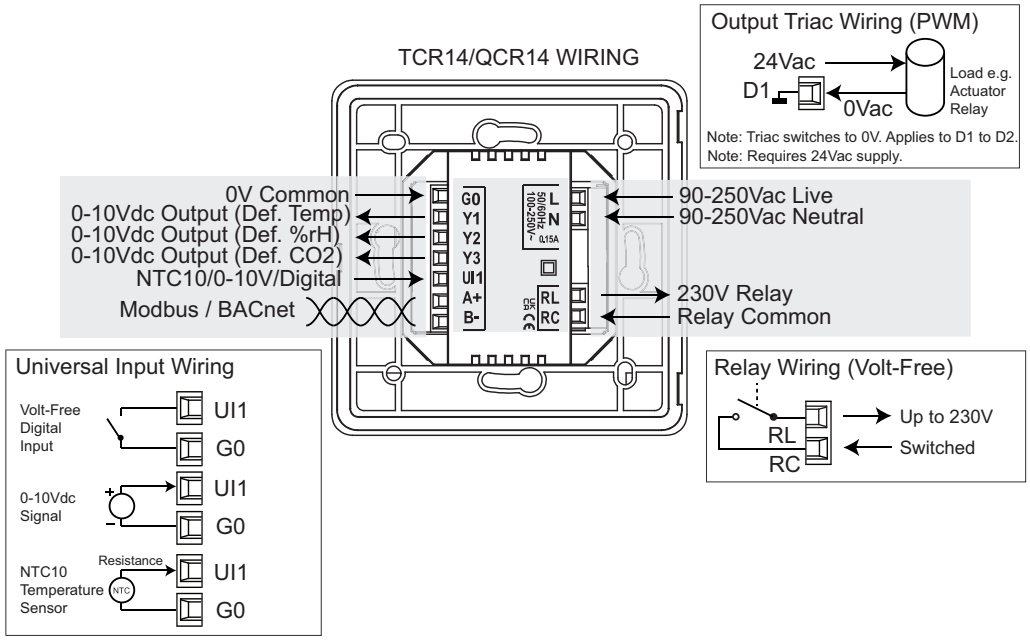

Terminal	Description
G0	0V Common
Y1	0-10Vdc Output 1, max. 2mA (Default: Heating Stage 1)
Y2	0-10Vdc Output 2, max. 2mA (Default: Cooling Stage 1)
Y3	0-10Vdc Output 3, max. 2mA (Default: EC Fan Speed)
UI1	NTC10/0-10V/Volt-Free Digital Input 1
A+	Modbus / BACnet RS485 A+
B-	Modbus / BACnet RS485 B-

Terminal	Description
L	90-250Vac Live, 50/60Hz
N	90-250Vac Neutral, 50/60Hz
RL	Relay Out, 230Vac, max 7A (res.)
RC	Relay Common, max. 230Vac

TCR15/QCR15 CONTROLLER WIRING

xCR15 series controllers are flush mounted to junction box. The diagram below illustrates the wiring.

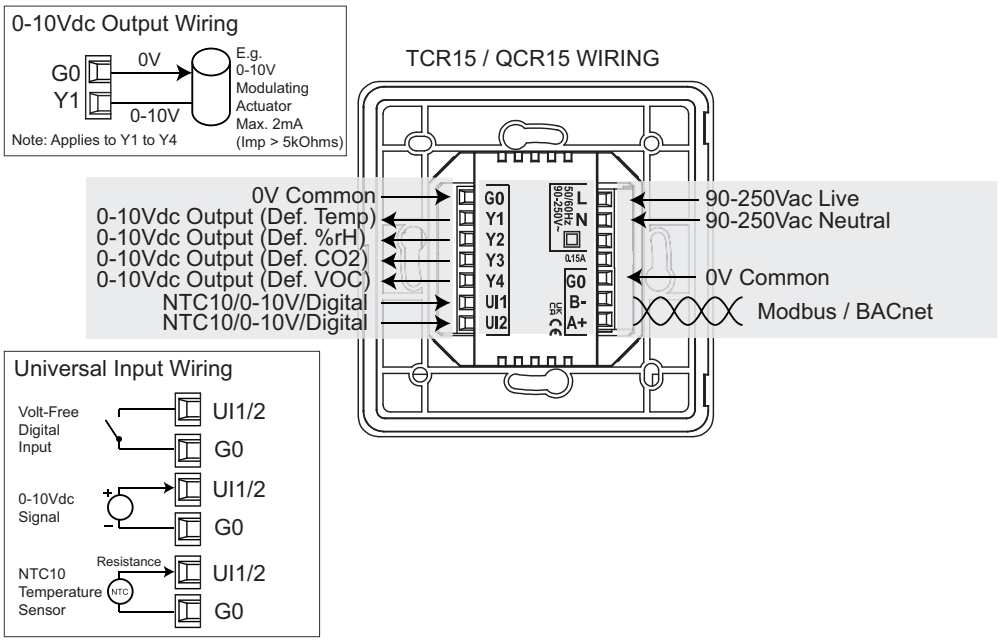

Terminal	Description
G0	0V Common
Y1	0-10Vdc Output 1, max. 2mA (Default: Heating Stage 1)
Y2	0-10Vdc Output 2, max. 2mA (Default: Cooling Stage 1)
Y3	0-10Vdc Output 3, max. 2mA (Default: EC Fan Speed)
Y4	0-10Vdc Output 4, max. 2mA (Default: CO2 Control)
UI1	NTC10/0-10V/Volt-Free Digital Input 1
UI2	NTC10/0-10V/Volt-Free Digital Input 2

Terminal	Description
L	90-250Vac Live, 50/60Hz
N	90-250Vac Neutral, 50/60Hz
G0	0V Common
B-	Modbus / BACnet RS485 B-
A+	Modbus / BACnet RS485 A+

WIRING GUIDELINES

In order to wire the device, remove the front cover by pressing the clip on the bottom of the display e.g. using a flat headed screwdriver. Be careful not to use excess force. Whilst pressing the clip lift the front cover from the bottom edges of the enclosure.

Make sure that power is switched off and carry out wiring according to the wiring connections drawing and local wiring guidelines. Insert the front cover and power up the device.

NOTE: For opening and mounting the enclosure please refer to the Dimensions and Installation Chapter.

Controller Applications

The xCR10/11/12/13/14/15 controllers have flexible software design that allows them to be tailored to most room control applications. Each controller can be configured from default settings using the Smart Configuration tools or via the network. The unused inputs and outputs are available for Building Management Systems for additional control functions.

DEFAULT APPLICATION

As factory default, the controller has been configure to provide single stage heating and cooling control with modulating EC Fan control. Typical application for this configuration is 4-pipe Fan Coil Unit with EC Fan. The diagram below illustrates the this application and wiring connections.

NOTE: The TCR/QCR controllers can be tailored to wide variety of even complex control applications. The default application is designed to use the very basic features of the product as a starting point for the application development.

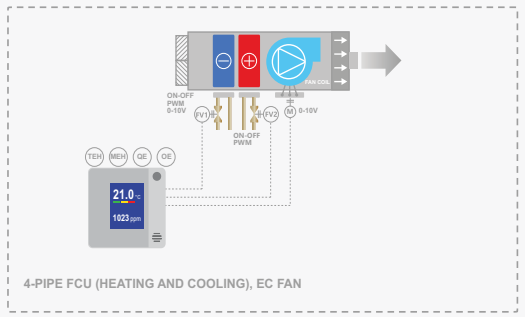

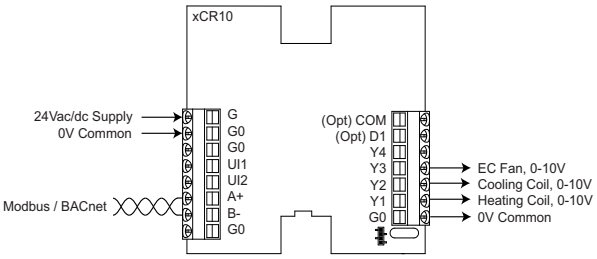

Control Functions

CONTROL MODES

The controllers have three control modes:-

- Occupied (Comfort)
- Unoccupied (Relaxed)
- Off (Night)

The controller operating mode is changed via the touchscreen, via PIR Occupancy Sensor (-OE option), via hardware inputs, via Modbus/BACnet network or via SmartPhone app (iOS). On transition from Occupied to Unoccupied/Off modes the Multi-Stage, Auxiliary and Humidity Loop user setpoint adjustments can be automatically reset to nominal values (enable *Reset User Adjustment* parameter)

NOTE: The control mode change happens when the controller sees the transition on the state of the command signal. This means that e.g if Digital Input 1 (UI1) overrides the controller to unoccupied mode, the mode can be changed e.g. via network regardless of the current DI1 state.

NOTE: The PIR movement sensor (-OE option) changes the controller mode both with On and Off transitions.

The control loop outputs (demand signals) are set in different modes as per the below table.

Control Mode	Heating and Cooling Stages 1/2/3 Demand	Auxiliary Control Loop Demand	Air Quality CO2 and VOC Control Demand	Humidity and Dehumidify Control Demand, Fan Demand
Occupied	Based on control loop with occupied deadzone settings	Based on control loop	Based on control loop	Based on control loop
Unoccupied	Based on control loop with unoccupied deadzone settings	Based on control loop	Based on control loop	Based on control loop
Off	0% (Frost logic enables heating stages to 100%)	0% (Frost logic enables heating to 100%)	0%	0%

NOTE: On power up the controller starts in Occupied (Comfort) mode.

MULTI-STAGE TEMPERATURE CONTROL

The controllers have multi-stage temperature control logic that meets requirements for advanced temperature control applications using PI-control (Proportional + Integral). Up to three (3) heating and up to three (3) cooling stages are available. Between the heating and cooling stages is a dead-zone where the heating and cooling outputs modulate to closed position providing energy savings in the building when the temperature reaches the setpoint. The heating and cooling deadzones can be separately set to provide asymmetrical control for increased energy savings.

The temperature control is operating in Occupied (comfort) / Unoccupied and Off modes. In unoccupied mode the temperature control is relaxed by increasing the heating and cooling deadzones. In the Off mode the temperature control is switched off (with frost protection active).

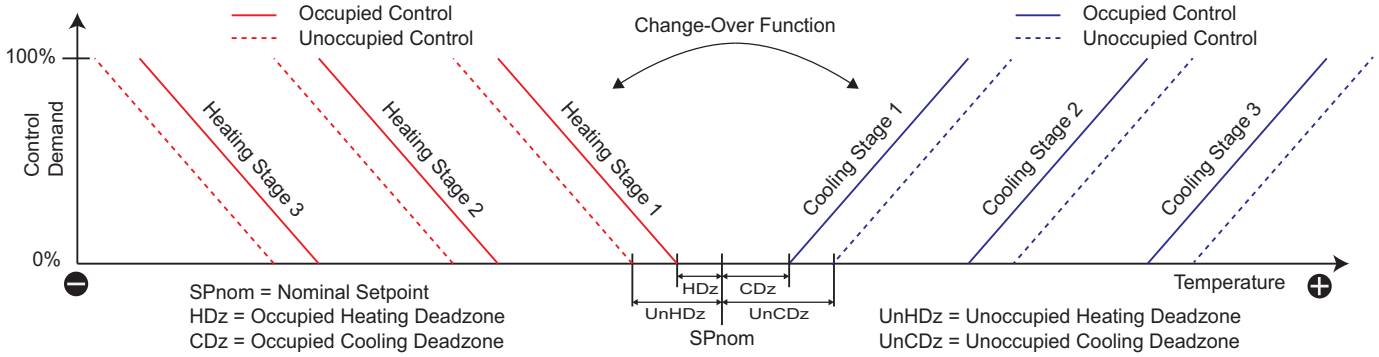

The multi-stage temperature control loop can be configured to control built-in temperature, Universal Input 1 temperature/voltage, Universal Input 2 Temperature/voltage, or network value (network temperature).

The loop controls to the Calculated Setpoint. The calculated setpoint uses the following formula:-

SPcalc = SPnom + User_Adjustment + Reset_Function_Adjustment

NOTE: Network value can only be used in systems where the measurement changes slowly.

FROST PROTECTION (OFF MODE)

In the Night Off mode, the controller automatically monitors the control sensor for low temperature protection (Frost Setpoint). If temperature drops below the frost setpoint, the heating stages are switched on to 100% until temperature rises 2° above the Frost Setpoint.

Parameter	Description	Value Range / Enumerations
Main Loop Source	Sets the Control Source for the Multi-Stage Control Loop. Note: If UI mode is NTC, the control value is as measured temperature. If the UI mode is 0-10V, then 0..10V is scaled to measurement according to UI Input Min/Max scaling parameters 523-526.	0 = Network Value (Reg 538) 1 = Temperature (Built-In, Default) 2 = UI1 - NTC10 3 = UI2 - NTC10 4 = UI1 - 0..10Vdc 5 = UI2 - 0..10Vdc 6 = Average Function
Main Loop Nominal Setpoint (SPnom)	Main Control Loop Nominal Setpoint Note: The control loop setpoint can be shifted by the high/low limit reset (cascade) control function indicated by limit icon.	0.0..212.0 (Default 21.0)
Main Setpoint Resolution	Main Setpoint Adjustment Resolution	0.1..10.0 (Default 0.1)
Min Adjustment	User Setpoint Adjustment Min Limit	-30.0..0.0 (Default -3.0)
Max Adjustment	User Setpoint Adjustment Max Limit	0..0..30.0 (Default 3.0)
Main Loop PB	Main Control Loop Proportional Band (for each stage)	1..500 (Default 5)
Main IA	Main Control Loop Integral Action Time (Set to 0 to disable)	0..3600s (Default 600s)
No of Heating Stages	Sets the number of heating stages.	0 = None 1 = 1-Stage (Default) 2 = 2-Stages 3 = 3-Stages
No of Cooling Stages	Sets the number of cooling stages.	0 = None 1 = 1-Stage (Default) 2 = 2-Stages 3 = 3-Stages
Occupied Heating Deadzone (HDz)	Occupied Mode Heating Deadzone	0.0..30.0 (Default 0.5)
Occupied Cooling Deadzone (CDz)	Occupied Mode Cooling Deadzone	0.0..30.0 (Default 0.5)
Unoccupied Heating Deadzone (UnHDz)	Unoccupied Mode Heating Deadzone	0.0..30.0 (Default 3.0)
Unoccupied Cooling Deadzone (UnCDz)	Unoccupied Mode Cooling Deadzone	0.0..30.0 (Default 3.0)
Frost Setpoint	Off Mode Frost Setpoint	0.0..60.0 (Default 10.0)
DZ Mode	Deadzone Mode. In standard mode the Integral Action element modulates to zero within the deadzone providing energy savings. In Hold mode the integral action element is held within the deadzone maintaining the output level fixed.	0 = Standard (Default) 1 = Hold

NOTE: If Change-Over function is activated, it can override the Heating Stage1 to operate as Cooling Stage1.

NOTE: Proportional Band is for each stage. E.g. if 3-stages of heating had been selected, and if the Proportional Band has been set as 5, then the Proportional Band across 3-stages of heating is 15.

AUXILIARY CONTROL LOOP

The controller has auxiliary PI-control (Proportional + Integral) loop where the control source can be configured to be built-in temperature, UI1, UI2 or Network value. The auxiliary control loop is normally used as a second temperature control zone (e.g. bathroom), but can also be used for generic purposes (setting UI1/UI2 mode to 0..10V).

The control loop operation operates as default in reverse (heating) mode i.e when measurement drops away from the setpoint the output increases. The loop can also operate in direct (cooling) mode. The direction of the operation can be reversed automatically using the change-over function (see change-over section).

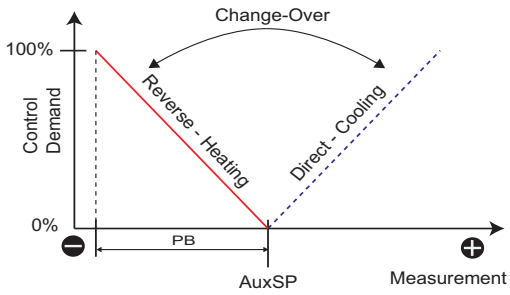

FROST PROTECTION (OFF MODE)

In the Off mode, if the Aux Control Loop sensor source is set to Network/NTC10 and the sensor readings drops below the Frost Setpoint (set under Multi Stage Control loop) and the Aux Mode is set to Heating (reverse), the Aux Loop Demand is set to 100% until the temperature reaches 2 degrees above the Frost Setpoint.

Parameter	Description	Value Range / Enumerations
Auxiliary Source	Sets the Source for the Auxiliary Control. Note: If UI mode is NTC, the control value is as measured. If the UI mode is 0-10V, then 0..10V is scaled to measurement according to UI Input Min/Max scaling parameters 523-526.	0 = Network Value (Reg 538) 1 = Temperature (Built-In, Default) 2 = UI1 - NTC10 3 = UI2 - NTC10 4 = UI1 - 0..10Vdc 5 = UI2 - 0..10Vdc 6 = Average (Average Function)
Min Adjustment	User Setpoint Adjustment Min Limit	-30.0..0.0 (Default -3.0)
Max Adjustment	User Setpoint Adjustment Max Limit	0..0..30.0 (Default 3.0)
Aux Setpoint	Auxiliary Control Loop Setpoint	0.0..212.0 (Default 21.0)
Aux Setpoint Resolution	Aux Setpoint Adjustment Resolution	0.1..10.0 (default 0.1)
Aux PB	Auxiliary Control Proportional Band	0.0..100.0 (Default 5.0)
Aux IA	Auxiliary Control Integral Action Time (Set to 0 to disable)	0..3600s (Default 600s)
Aux Mode	Auxiliary Loop Control Mode Note: Change-Over mode can override the mode.	0 = Reverse (Heating) 1 = Direct (Cooling)

CHANGE-OVER FUNCTION

The controller can have a change-over function that reverses the multi-stage temperature control loop Heating Stage1 (and Cooling Stage1) operation, or the auxiliary control loop operation. The control loop that is affected by the change-over function is configured in the settings.

The change-over function is activated by the digital input (UI1/UI2 digital input), via temperature (UI1/UI2 NTC10 temperature), or via network. If temperature is selected, the change-over is active (cooling mode is active) if temperature drops below the change-over low temperature until temperature reaches the change-over high temperature (heating mode becomes active).

Parameter	Description	Value Range / Enumerations
Change-Over Source	Sets the Source for the Change-Over Function. Note: As default the Network Command is Off i.e. no change-over function is active. Note: When using Digital Inputs set the corresponding universal input mode to '4 - Network'.	0 = Network Command (Reg 721, Default) 1 = UI1 - NTC10 2 = UI2 - NTC10 3 = Digital Input 1 (UI1) 4 = Digital Input 2 (UI2)
Change-Over Target	Target of the Change-Over Control.	0 = None (Default) 1 = Multi-Stage Control Loop 2 = Auxiliary Control Loop 3 = Multi-Stage and Aux Loops
Change-Over Low Temperature	Temperature below which the change-over is active (cooling stage active). Note: Relevant only for NTC Input 1/2 options.	0..100.0° (32..212°F) Default 18°C
Change-Over High Temperature	Temperature above which the change-over is off (heating stage active, no override on control). Note: Relevant only for NTC Input 1/2 options.	0..100.0° (32..212°F) Default 22°C
Network Change-Over Override	Heating / Cooling Mode Command from Network. Note: Requires change-over source to be set as Network.	0 = Heating (Default) 1 = Cooling

NOTE: Change-over function is not active in Off Mode.

NOTE: Typically configure the control output (Y1 to Y4) to Heating Stage1. In normal operation the output provides heating control (i.e. when temperature is below setpoint, there is heating demand). When the change-over is active, the same output provides cooling control (i.e. when temperature is above setpoint, there is cooling demand).

LOW/HIGH LIMIT RESET (CASCADE) CONTROL FUNCTION

The controller has a low/high limit reset control function that is typically used to protect floor surfaces in case of high underfloor heating temperatures, or prevent condensation in case of cool floor temperatures in high humidity environments such as bathrooms.

When active low / high limit is indicated with the Limit Icon on the status bar.

NOTE: Low/high limit function only operates in Occupied and Unoccupied modes.

Parameter	Description	Value Range / Enumerations
Reset Control Source	Sets the Temperature Source for the Reset Control Function.	0 = Network Value (Reg 538) 1= UI1 - NTC10 2 = UI2 - NTC10
Reset Control Target	Target of the Reset Control Logic. The reset logic resets the target control loop setpoint as per calculated by the logic.	0 = None (Default) 1 = Multi-Stage Control Loop Setpoint 2 = Auxiliary Control Loop Setpoint
High Limit Setpoint	High Limit Setpoint. Above this limit the setpoint is reduced proportionally according to the ratio and temperature difference.	0.0..100.0° (32..212°F) Default 35°C
Low Limit Setpoint	Low Limit Setpoint. Below this limit the setpoint is increased proportionally according to the ratio and temperature difference.	0.0..100.0° (32..212°F) Default 15°C
Reset Ratio	Reset ratio used to calculated the setpoint reset.	0.0..10.0 (Default 1.0)

MAX FUNCTION / PRIORITY LEVEL FUNCTION

MAX FUNCTION

The controller has two max functions that have two inputs. Using the Max Functions it is possible to, for example, configure how fan is controlled (Max 1 Default Settings), or take maximum of cooling control and CO2 control to control fresh air dampers (Max 2 Default Settings).

Parameter	Description	Value Range / Enumerations
Max Function 1 Source 1 Max Function 2 Source 1	Sets the Source for Input 1 of Maximum Function 1 Max Function 1 Source 1 Default: Heating Stage 1 Sets the Source for Input 1 of Maximum Function 2 Max Function 2 Source 1 Default: Cooling Stage 1	0 = Network Value (Reg 538) 1 = Heating Stage 1 2 = Heating Stage 2 3 = Heating Stage 3 4 = Cooling Stage 1 5 = Cooling Stage 2 6 = Cooling Stage 3 7 = Auxiliary Demand 8 = CO2 Demand 9 = VOC Demand 10 = Humidity/DeHum Demand 11 = Max Function 1 12 = Max Function 2 13 = Fan Demand
Max Function 1 Source 2 Max Function 2 Source 2	Sets the Source for Input 2 of Maximum Function 1 Max Function 1 Source 2 Default: Cooling Stage 1 Sets the Source for Input 2 of Maximum Function 2 Max Function 1 Source 2 Default: CO2 Demand	0 = Network Value (Reg 538) 1 = Heating Stage 1 2 = Heating Stage 2 3 = Heating Stage 3 4 = Cooling Stage 1 5 = Cooling Stage 2 6 = Cooling Stage 3 7 = Auxiliary Demand 8 = CO2 Demand 9 = VOC Demand 10 = Humidity/DeHum Demand 11 = Max Function 1 12 = Max Function 2 13 = Fan Demand 14 = DI1 (UI1) PriLevel 15 = DI2 (UI2) PriLevel
Priority Level	Sets the Max Function output level when the Priority Input (DI1 (UI1)/DI2(UI2)) is active.	0..100%

EXPLANATION MAX1 DEFAULT OPERATION

As default the Max1 function reads the Heating Stage 1 and Cooling Stage 1 demand values from the Multi-Stage Control loop. Maximum of these values is then used in the fan control loop to set the fan speed (as Fan Control Source = Max Function 1) i.e. the fan is running when there is either heating or cooling demand.

PRIORITY LEVEL FUNCTION (from Fw1.74 onwards)

Priority level function allows the Max Function output to be set on a defined fixed level when the corresponding Digital Input (Universal input in digital mode) is active. The output level is defined by the *736: Priority Level* parameter. When the digital input is not active, the Max Function output takes the Source 1 value.

This is an useful function e.g. to override output when a switch or external contact activates.

Note: Please set the corresponding Universal Input mode (UI1 Mode/UI2 Mode) to 4: Digital Network or any of the 6-11: Digital Modes. The digital input polarity can also be reversed from parameters 527/528.

AVERAGE FUNCTION

Average Function can be used to average multiple measurements, and then used the average value as the Multi-Stage Control Loop or Auxiliary Control source. .

Parameter	Description	Value Range / Enumerations
Measurement 1	Sets the Source for Average Measurement 1.	0 = Disabled (Default) 1 = UI1 2 = UI2 3 = Internal Temperature
Measurement 2	Sets the Source for Average Measurement 2.	
Measurement 3	Sets the Source for Average Measurement 3.	
Measurement 4	Sets the Source for Average Measurement 4.	

EC FAN AND 3-SPEED FAN CONTROL

Fan control logic is used to control EC fans and 3-Speed fans (using Triacs on xCR11/xCR12 models, or 0-10Vdc outputs on xCR10/11/12 models). Fan control logic can follow Continuous or Stepped control. In Continuous control when the source (e.g. heating and cooling demand) increases the fan speed increases linearly between speed settings.

When under automatic control if the input demand is less than the minimum level (*Min Fan Speed)* the output will be held at the minimum level. The only exception to this is when the *Fan Off Mode* is set to Off and the input demand is 0% in which case the output will be 0%. The *Max Auto Fan Speed* parameter sets the maximum fan speed in automatic mode. This can be over-driven manually by setting the *Fan Speed 1/2/3* levels above the *Max Auto Fan Speed.*

When the fan control source activates (increases above 0%) the Fan Speed is switched to '*Fan Speed 1'* Level for adjustable delay time ('*Fan Startup Delay*') regardless of the *Min Fan Speed* setting. This allows EC Fans to start to run properly before resuming normal control.

If the *Fan Off Mode* setting is set to Off, the Fan output switches OFF after an adjustable '*Fan Off Delay'* Time.

3-SPEED FAN CONTROL - STEPPED FAN MODE

In stepped mode the Fan Speed is set in steps (for EC Fans or 3-Speed Fans) with 5% switching OFF hysteresis. With xCR11 controllers the Triacs can be switched on the selected fan speeds (Speed 1, Speed 2, Speed 3).

The current Fan Speed can also be configured to trigger 0-10V outputs (Y1-Y4) to be 100% when the corresponding fan speed is active.Set the *Y1/2/3/4 Mode = Fan Speed 1/2/3* to activate this. It is also possible to configure 0-30s switching delay between the Fan Speed 1/2/3 using parameter *751 = Stepped Fan Y Delay* (applies only for the 0-10V stepped fan).

Fan Speed Settings : Default
Fan Off Mode: Minimum Speed

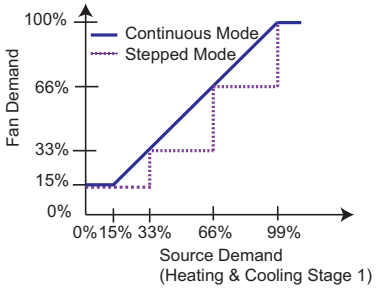

Fan Speed Settings : Custom Example
Fan Off Mode: Minimum Speed

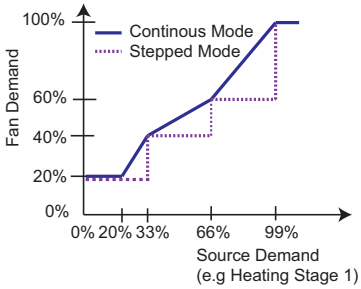

Fan Speed Settings : Default. Except Fan Off Mode
Fan Off Mode: Off (Fan Off at 0% Demand)

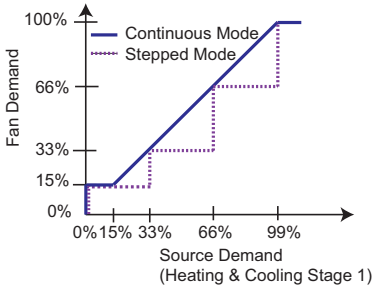

Parameter	Description	Value Range / Enumerations
Fan Control Source	Sets the Source Demand for the Fan Control Function.	0 = Network Value (Reg 538) 1 = Heating Stage 1 2 = Heating Stage 2 3 = Heating Stage 3 4 = Cooling Stage 1 5 = Cooling Stage 2 6 = Cooling Stage 3 7 = Auxiliary Demand 8 = CO2 Demand 9 = VOC Demand 10 = Humidity/DeHum Demand 11 = Max Function 1 (Default) 12 = Max Function 2
Min Fan Speed	Sets the Minimum Fan Speed for EC Fans	0..100% (Default 15%)
Fan Speed 1	Sets the Fan Speed 1 for EC Fans (when source 33%)	0..100% (Default 33%)
Fan Speed 2	Sets the Fan Speed 2 for EC Fans (when source 66%)	0..100% (Default 66%)
Fan Speed 3	Sets the Fan Speed 3 for EC Fans (when source 99%)	0..100% (Default 100%)
Fan Mode	Sets the EC Fan Mode. Continuous Mode scales the fan demand based on the source and Fan Speed 1/2/3 settings. In Stepped mode the fan speed steps according to Fan Speed 1/2/3 settings.In stepped mode the Fan Speed switching hysteresis is 5%.	0 = Continuous Mode (Default) 1 = Stepped Mode
Fan Off Mode	Configures if the Fan is running at minimum level or is off when the fan control demand is at 0%. 1 - Minimum Speed: Running at Minimum Speed at Occupied and UnOccupied (0% in OFF mode). 2 - Minimum Occupied: Running at Min Speed in Occupied Only	0 = Off (Default) 1 = Minimum Speed 2 = Minimum Occupied
Fan Off Delay	Switch OFF delay when the source demand drops to 0 (and Fan Off Mode is set to Off)	0..600 seconds (Default 0)
Fan Startup Delay	Fan Startup when the source demand increases above 0%. During the delay the fan runs at Fan Speed 1 setting.	0..600 seconds (Default 10)
Fan Level Override	Current Fan Level that can be set from the touchscreen or network (last command prevails). Note: If Fan Levels = 0-1-A, options 2, 3 and 4 override to Automatic control. Note: If Fan Levels = 0-1-2-A, then Level 2 overrides to Speed 3. Both 3 and 4 override to Automatic control	0 = Off 1 = Level 1 2 = Level 2 3 = Level 3 4 = Automatic
Fan Levels	Sets the available Fan Override levels for the Touch button on the display and the Fan Network Override	0 = 0-1-A 1 = 0-1-2-A 2 = 0-1-2-3-A (Default)

Alternate Fan Adjust	Alternative Fan Speed Adjustment setting. Uses the temperature setpoint adjustment location with +/- buttons	0 = Disable 1 = Enabled
Stepped Fan Y Delay (xCR10/12)	Set the switching delay between Fan Speeds 1, 2 and 3 for the Y Analogue Outputs when Fan Mode = Stepped.(from Fw 1.52)	0..30 seconds (Default 0)
xCR13: Fan Relay Delay	Delay between Fan Level Relays switching on the xCR13 Controllers	0..30s (0s default)
Max Auto Fan Speed	Maximum Fan Speed in Automatic Control Mode (from Fw 1.57)	0..100% (Default 100%)

3-SPEED FAN RELAY CONTROL (xCR13 MODELS)

xCR13 models are equipped with 3 x 230Vac relays that are as default configured as 3-speed fan control (under *Relay Output Settings*). These outputs are controlled as ON/OFF based on the *740: Fan Control Source* demand. *FanSpeed1* is ON when source > Fan Speed 1 Level, *FanSpeed2* when source > Fan Speed Level 2 and *FanSpeed3* when source > Fan Speed Level 3. Hysteresis of 5% applies.

Parameter *751: Fan Relay Delay* can be used to delay each relay ON switching 0..30seconds (default 0s).

NOTE: To activate stepped fan control set *745: Fan Mode = Stepped.*

MANUAL FAN SPEED CONTROL

The touchscreen fan speed manual override buttons set the Fan speed as per Fan Speed 1, 2 and 3 settings (see *Fan Speed Adjustment* section under Touchscreen chapter for details). In order for the controller to return back to automatic control the user needs to select Automatic mode.

The controller fan output level can also be override from the network by using the *Fan Override Level* parameter.

The available levels for manual and network control are set by the *Fan Levels* configuration parameter.

NOTE: In case of 0-1-2-A configuration if the user selects manual fan speed 2 from the touchscreen, the controller also uses Fan Speed 3 setting.

CO2 (CARBON DIOXIDE) CONTROL

QCR controllers have built-in CO2 measurement and control functionality. The CO2 measurement is typically used to boost the ventilation in case of higher concentration. The QCR provides CO2 control using PI (Proportional + Integral) control logic. The control loop output can be connected to the physical outputs to e.g. control the fresh air damper using analogue outputs.

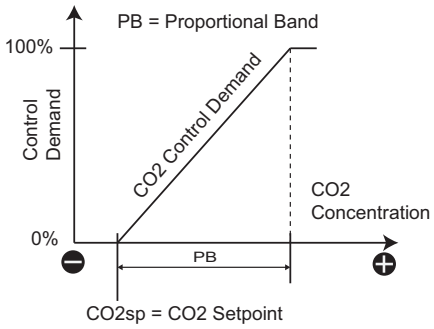

With Proportional Control when the CO2 measurement increases above the *CO2 Setpoint,* the CO2 control demand (and control output) increases proportionally based on the Proportional Band (PB) setting - see image.

Often fresh air damper is also used to provide cool air to the building. In this case the damper is linked to both Cooling Stage temperature control and CO2 control. This can be achieved using so called 'Maximum VAV' logic. With QCR the Max Function can be used to take the maximum of Cooling and CO2 demands and link it to an output (*Max Function 2* is configured as default for this).

To set the minimum output position for the damper, the *Min Analogue Output* settings can be used.

The *CO2 Setpoint Setback Parameter (764)* allows the CO2 Setpoint to be increased in the Unoccupied mode for the amount set in the parameter 764. For example, the CO2 setpoint can be changed from 750 (default) in Occupied mode to 1000 in the Unoccupied mode by setting *CO2 Setpoint Setback Parameter (764)* to 250 (ppm).

The CO2 measurement can be displayed on the screen and the measurement is available via Modbus and BACnet communication network (please refer to Touchscreen and Modbus/BACnet Communications sections for further details).

The CO2 sensor provides Automatic Self Calibration logic keeping measurement accurate over the time. The Automatic calibration can be disabled and the sensor can be manually calibrated (see Calibration Settings).

Parameter	Description	Value Range / Enumerations
CO2 Control Source	Sets the Source for the CO2 Control Note: If set to UI1/UI2, then 0..10V is scaled to measurement according to UI Input Min/Max scaling parameters 523-526.	0 = Network Value (Reg 539) 1 = Builti-In CO2 (Default) 2 = UI1 - 0..10V 3 = UI2 - 0..10V
CO2 Setpoint	CO2 Control Setpoint	0..10,000 (Default 750)
CO2 PB	CO2 Control Proportional Band	1..10,000 (Default 500)
CO2 IA	CO2 Control Integral Action Time (Set to 0 to disable)	0..3600s (Default 0s)
CO2 Setpoint Setback	CO2 Control Setpoint SetBack in Unoccupied mode	0..2,000 (Default 0)
CO2 Control Mode	Configures the CO2 Control Loops Mode.	0 = Reverse 1 = Direct (Default)

NOTE: Please note that it is possible to use the CO2 control loop for other generic control purposes by configuring the *CO2 Control Source* to be Network Value or UI1/UI2 (no CO2 measurement required).

VOC AIR QUALITY CONTROL (WITH RH-VOC OPTION)

The RH-VOC control option measures Volatile Organic Compounds with automatic humidity compensation providing relative indoor air quality index signal (see below diagram) between 0 to 500

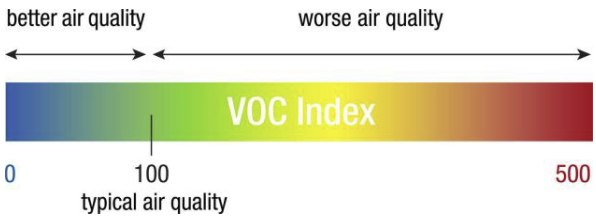

Measured air pollutants include harmful gases (acetone from paints and glues, toluene from furniture, mattresses and building products), other gases (ethanol from alcohol, perfumes and cleaners), odours (hydrogen sulphide and volatile sulphuric compounds from rotten food and farts; ammonia and amines from pet urine), smoke (benzene and nitrosamines from cigarette smoke).

With VOC PI (Proportional + Integral) control logic it is possible to control the air quality by e.g. increasing ventilation on high VOC concentration. The VOC control logic operates in Direct sequence i.e.. when the VOC Index increases the VOC Control Demand increases proportionally. For typical control applications set the VOC Index Setpoint = 100. This way when the VOC sensor senses deterioration in air quality, the controller output will automatically compensate by increasing the VOC demand signal.

WELL Building Standard ® Compliant TVOC Concentration

According to the Performance Guidebook v.2 of the WELL Building Standard®, performance of an IAQ monitor can be assessed by using ethanol as calibration gas and the Mølhave gas mixture to convert the ethanol concentration into the

Mølhave equivalent of TVOC or $TVOC_{Mølhave.}$ The xCR controllers can calculate and display $TVOC_{Mølhave}$ by selecting *529 VOC Measurement Mode = TVOC Molhave* from the *Calibration and VOC Mode Settings* Menu. The maximum value is or 5482 ug/m^3.

Now Parameter *403 VOC Sensor (index)* shows the TVOC concentration based on the $TVOC_{Mølhave}$ index. .

RESET® Air compliant TVOC concentration

The xCR controllers can calculate and display $TVOC_{Isobutylene}$ by selecting *VOC Measurement Mode*/*TVOC Isobutylene* from the *Calibration and VOC Mode Settings* Menu. $TVOC_{Isobutylene}$ setting provides RESET® Air compliant TVOC concentration. The maximum value is 5482 ug/m^3.

Parameter	Description	Value Range / Enumerations
VOC Setpoint	VOC Control Setpoint	0..500 (Default 100)
VOC PB	VOC Control Proportional Band	1..500 (Default 100)
VOC IA	VOC Control Integral Action Time (Set to 0 to disable)	0..3600s (Default 0s)
VOC Mode	VOC Measurements Mode	0 = VOC Index 1 = TVOC Molhave, ug/m3 2 = TVOC Isobutylene, ug/m3
VOC Learning Time Offset	VOC Learning Time Offset, set to 12 for Index mode, and 720 Building Standards Mode (Reset/Well)	1..1000 hours (Default 12)

NOTE: The *VOC Learning Time Offset* parameter defines over what time span the VOC algorithm builds and updates its internal baseline (offset) from recent sensor history. Set to 720 for Building Standards.

HUMIDITY CONTROL (WITH RH-OPTION)

The controller has a single stage humidity / de-humidity PI-control loop that calculates the loop demand based on the built-in or external humidity measurement. Set the *Humidity Mode* to *Humidify* for humidifying action and to *De-Humidify* for dehumidifying action.

Parameter	Description	Value Range / Enumerations
Humidity Source	Sets the Source for the Humidity Control. Note: If set to UI1/UI2, then 0..10V is scaled to measurement according to UI Input Min/Max scaling parameters 523-526.	0 = Network Value (Reg 538) 1 = Built-In Humidity (Default) 2 = UI1 - 0..10V 3 = UI2 - 0..10V
Humidity Setpoint	Humidity Control Loop Setpoint	0..100% (Default 50%)
Humidity PB	Humidity Control Proportional Band	1..100% (Default 20%)
Humidity IA	Humidity Control Integral Action Time (Set to 0 to disable)	0..3600s (Default 0s)
Humidity Mode	Humidity Loop Control Mode	0 = Humidify (Reverse) 1 = De-Humidify (Direct)

DEHUMIDIFICATION USING COOLING

In addition the controller has dehumidification function where the multi-stage temperature control Cooling Stage 2 is overridden to 100% when the dehumidification demand is 50% (and the Humidity Interlock function is enabled). The Cooling Stage 2 returns to automatic control after dehumidification demand drops to 0%. To control the switch on humidity and switch off humidity, it is recommended that the humidity PI-control loop is set to operate in P-mode (set Integral Action to 0 to disable it). Using this function it is possible to condition the supply air simultaneously with heat and cool (and dehumidify in the process, ref Mollier Diagram).

Parameter	Description	Value Range / Enumerations
Humidity Interlock	Enables Cooling Stage 2 Interlock on High Humidity (at 50% humidity loop demand)	0 = Disabled (Default) 1 = Enabled

NOTE: Register 425 can be used to indicate the current cooling mode status.

CONDENSATION CONTROL

CONDENSATION SENSOR INPUTS

In cooling systems (e.g. chilled beam) when the pipe surface temperature drops reaching the dew point, this creates a condensation risk. The xCR controller have protection logic to minimise the condensation. This can be activated by enabling '*Digital Cooling Disable*' on the Universal Inputs. In this mode the universal input operates as volt-free digital input. When the input closes the controller switches the multi-stage control loop Cooling Stage Demands to 0% until the volt-free input is off (open contact).

Alternative method is to use resistive condensation sensors where the resistance drops when condensation occurs, and resistance increases when the sensor is dry. To activate this function set the Universal Input mode to '*Digital Cooling Disable*'. When resistance drops approximately below 100kOhms the condensation risk is active and when the resistance increases above approx. 150kOhms, there is no condensation risk. In case of condensation risk the multi-stage Cooling Stage Outputs are set to 0%

DEW POINT CONDENSATION CONTROL

If humidity sensor is fitted (-RH option), the dew point temperature can be calculated by the relative humidity and temperature. The xCR controllers have unique function, where the room temperature and humidity is used in calculation of the dew point temperature. This temperature is then compared to the pipe temperature (set UI1 or UI2 to Dew Point mode) and when pipe temperature is dropping closer to the dew point temperature, the cooling outputs are **proportionally limited**, until the dew point danger has dissipated. The diagram on the right illustrates the maximum cooling output as a function of Dew Point temperature and Pipe temperature (calculated by *Dew Point Offset - OSdp* and *Dew Point Range - Rdp* parameters).

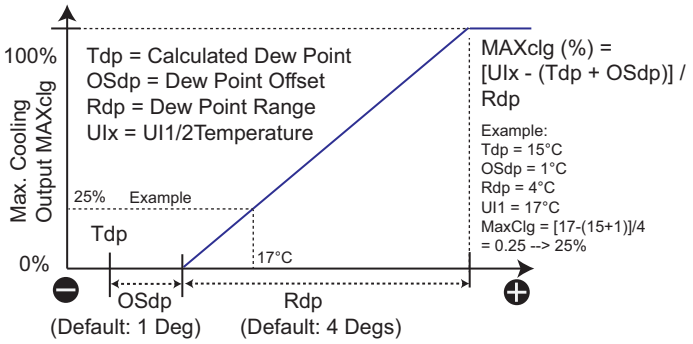

Alternatively by changing the *Dew Point Mode* parameter to **On/Off,** the cooling outputs are switched OFF at *Tdp* + *OSdp* and return back to normal control at *Tdp* + *OSdp* + *Rdp*.

NOTE:The controller uses approximation method for the dew point temperature calculation. This only works when the relative humidity is more than 50% rH.

BOOST FUNCTION

If the Boost Button has been activated on the Touchscreen, the controller output or mode can be boosted for the *Boost Time* by pressing the button. For more details refer to Boost Button section in the Touchscreen chapter.

MOVEMENT DETECTION AND CONTROL (OE OPTION)

The controllers can be fitted with an optional pyroelectric infrared motion sensor for the movement and occupancy detection. The sensor element is designed for optimal usability and reliability with low power consumption, better sensitivity and signal-to-noise ratio reducing the false detections. The diagram illustrates the detection area.

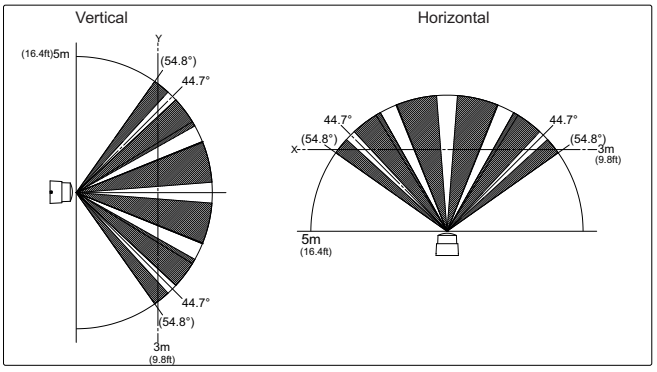

In Standard mode when the controller detects Occupancy it switches to Occupied Mode. The *PIR Delay Off Timer* (10..28,800 seconds) parameter sets the time that the status latches ON after detection of movement.

Once the timer has counted down the PIR status switches Off and the Controller Mode is switched to Unoccupied mode or Off mode depending on the configuration below.

NOTE: The PIR movement sensor has 30s warm-up time on reset.

NOTE: If the controller mode is overridden via the display or network to OFF mode, and the *Inactive PIR Control Mode* is set to *Unoccupied*, the PIR operation does not have impact.

NOTE: If *PIR Op. Mode Control* is set to Off, the PIR measurement does not have any impact on the control logic.

MULTI-TRIGGER MODE

The PIR mode can be changed to multi-trigger mode. In this mode during the *Trigger Period* the number of movement detections must reach the *PIR Trigger Count* amount for the controller to activate the Occupied. Mode. If within the *Trigger Period* the trigger count is not reached, it is reset to 0. After each movement detection, there is delay of 10 seconds until further movement is registered to the trigger count. This feature can be used, for example, prevent the system to switch on if a person enters temporarily to the room space.

Parameter	Description	Value Range / Enumerations
PIR Trigger Mode	Selects the Mode of the PIR Sensor	0 - Standard (default) 1 - Multi-Trigger
PIR Trigger Count	Trigger Count in Multi-Trigger Mode	1..10 (default 600 secs)
Trigger Period	Trigger Period for monitoring Trigger Count	30.1,800 seconds (default 300 secs)
PIR Off Delay	Delay Off Timer for the PIR Movement/Occupancy sensor	10..28,800 seconds (default 600 secs)
Inactive PIR Control Mode	Activated Controller Mode when the PIR (OE-option) does not detect movement. If Option 0 = Unoccupied is selected, and the controller is in the OFF operating mode the PIR is disabled - no impact.	0 = Unoccupied Mode (Default) 1 = Off Mode
PIR Op. Mode Control	PIR influence on the operation mode. If set to Off, the PIR only shows the status on the network i.e. effectively is disabled.	0 = On (Default) 1 = Off

Universal Input Configuration

Universal Input can be configured to operate as NCT10 (resistive), resistive (kOhms), Dew Point Sensor, Analogue (0..10V), Condensation Sensor (Resistive) or Digital On/Off. Configure and wire inputs as required by the application operation using the below diagram as guidance.

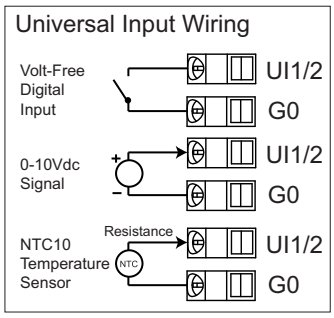

NTC10: Use this option to measure temperature using NTC10 temperature sensors. For control loops to use NTC10, select NTC10 in the control loop source parameters.

Dew Point Sensor: Uses the NTC10 Sensor for Dew Point Calculation Logic.

Resistive - kOhms : Measures the input resistance in kOhms (used e.g. for leak detection sensors) - measurement available over network. Note: the measurement resolution is 0.1 kOhms

Digital Modes: Select as appropriate to override the controller operation modes.

NOTE: It is possible to reverse the polarity of Universal Inputs in Digital Mode using Parameters 527 and 528.

NOTE:xCR14 has only 1 x UI.

Condensation Sensor Option 5: Uses resistive condensation sensor.

Parameter	Description	Value Range / Enumerations
UI1 Mode	Sets the Universal Input 1 Mode.	0 = Not Used 1 = 0..10V (0..100%) 2 = NTC10 (Default) 3 = Dew Point (NTC10) 4 = Digital - Network 5 = Digital - Disable Cooling / Resistive Condensation Sensor 6 = Digital - Occupied 7 = Digital - Unoccupied 8 = Digital - Off 9 = Digital - Unoccupied / Occupied 10 = Digital - Off / Occupied 11 = Digital - Off / UI State 12 = Resistive - kOhms
UI2 Mode	Sets the Universal Input 2 Mode. Note: Option 6 remembers the last state and when the input opens the controller returns to this state (OFF or Unoccupied) Note: Options 7 and 8 override to selected controller mode on OFF to ON transition. Note: Option 9 overrides to Occupied Mode on ON transition and Unoccupied Mode on OFF transition (if the controller is in the OFF operating mode the input is disabled - no impact). Note: Option 10 overrides to Occupied Mode on ON transition and Off Mode on OFF transition. Note: Digital - Off / UI State overrides the controller at ON transition to the state of the other Digital Input.	
UI1 Scale Min.	Sets the scaling for Min. Measurement when UI1 @ 0V (0%)	0.0..3000.0 (Default 0)
UI1 Scale Max.	Sets scaling for the Max. Measurement when UI1 @ 10V (100%)	0.0..3000.0 (Default 100.0)
UI2 Scale Min.	Sets the scaling for Min. Measurement when UI2 @ 0V (0%)	0.0..3000.0 (Default 0)
UI2 Scale Max.	Sets scaling for the Max. Measurement when UI2 @ 10V (100%)	0.0..3000.0 (Default 100.0)
UI1 Digital Polarity	UI1 Digital Input Polarity Setting - allows the polarity of the input operation to be reversed when used in digital modes.	0 = Normal (Default) 1 = Reverse
UI2 Digital Polarity	UI2 Digital Input Polarity Setting - allows the polarity of the input operation to be reversed when used in digital modes.	0 = Normal (Default) 1 = Reverse

UI1/UI2 Input Minimum and Maximum scaling parameters are used to scale 0..10V signal to the measurement. E.g. typical humidity transmitters scaled 0..100%rH measurement to 0..10V on their output. In this case set the *Scale Min.* parameter to 0 and *Scale Max.* parameter to 100.

In case of CO2 transmitter, these scale the 400..2,000ppm reading to 0..10V. In this case set the *Scale Min.* parameter to 400 and *Scale Max.* parameter to 2,000.

NOTE: Using the scaling it is possible also connect pressure sensors to the controller. The controllers have also advanced UI1/UI2 voltage clamping settings that can be used to scale e.g. input voltage for e.g. 0..10V = 0..5000ppm CO2 sensors.

Analogue Output and Valve Control Options

0 - 10V OUTPUT CONFIGURATION AND SCALING

The Y1/Y2/Y3/Y4 0..10V outputs can be configured to control based on the options in the below table. In addition each output can be scaled between minimum and maximum limits. Reversing the limits is also possible which will reverse the output voltage (e.g. for situations where the 0..10V valve signal closes the valve instead of opening it).

NOTE: xCR11 controllers have only Y1 available.

TIP: By setting minimum output position it is possible e.g. set minimum fresh air level to air dampers.

NOTE: At Night Off mode the outputs switch to 0V (or 10V if reverse mode has been activated).

NOTE:Setting the *Y1/Y2/Y3/Y4 Output Mode = Network Value*, it is possible to override the output level usig *Y1/Y2/Y3/Y4 Override Value* parameter. With Modbus models it is also possible to use Commissioning Overrides for the outputs. With BACnet use AV objects to override the outputs.

Parameter	Description	Value Range / Enumerations
Y1 Output Mode	Y1 Output Configuration Default: Heating Stage 1	0 = Network Value 1 = Heating Stage 1 2 = Heating Stage 2 3 = Heating Stage 3 4 = Cooling Stage 1 5 = Cooling Stage 2 6 = Cooling Stage 3 7 = Auxiliary Demand 8 = CO2 Demand 9 = VOC Demand 10 = Humidity/DeHum Demand 11 = Max Function 1 12 = Max Function 2 13 = Fan Demand 14 = 6-Way Valve 15 = Reverse 6-Way Valve 16 = Fan Speed 1 (10V) 17 = Fan Speed 2 (10V) 18 = Fan Speed 3 (10V)
Y2 Output Mode	Y2 Output Configuration (only xCR10/12/14/15) Default: Cooling Stage 1	
Y3 Output Mode	Y3 Output Configuration (only xCR10/12/14/15) Default: Fan Speed Control	
Y4 Output Mode	Y4 Output Configuration (only xCR10/12/15) Default: CO2 Control Note: For Modus to override the output from the network set the mode to network. Note: For BACnet the output can be overridden using corresponding AV objects. Note: Options 16,17,18; by setting the Fan Mode = Stepped, the output is overridden to 100% (10V) when at the selected speed.	
Y1 Minimum	Y1 Output Minimum Level	0.0..100.0% (Default 0%)
Y1 Maximum	Y1 Output Maximum Level	0.0..100.0% (Default 100%)
Y2 Minimum	Y2 Output Minimum Level	0.0..100.0% (Default 0%)
Y2 Maximum	Y2 Output Maximum Level	0.0..100.0% (Default 100%)
Y3 Minimum	Y3 Output Minimum Level	0.0..100.0% (Default 0%)
Y3 Maximum	Y3 Output Maximum Level	0.0..100.0% (Default 100%)
Y4 Minimum	Y4 Output Minimum Level	0.0..100.0% (Default 0%)
Y4 Maximum	Y4 Output Maximum Level	0.0..100.0% (Default 100%)

6-WAY VALVE CONTROL

The 6-way valve option allows the controller to control 6-way valves that can be used for both heating and cooling control, simplifying heating/cooling coil structure. The principle of 6-way valve control is shown in the diagram. To activate the 6-way valve control the 0..10V output (Y1..Y4) is set to '6-way valve'. It is possible to modify the 6-way valve control parameters to suit the different 6-way valve manufacturers. The default settings are provided for Belimo 6-way valve.

Using the 'Reverse 6-Way Valve' option the Sequence 1 and Sequence 2 are swapped. This allows the controller to be configured to suit regardless of the 6-way valve piping.

The table below illustrates the switching parameters for the 6-way control.

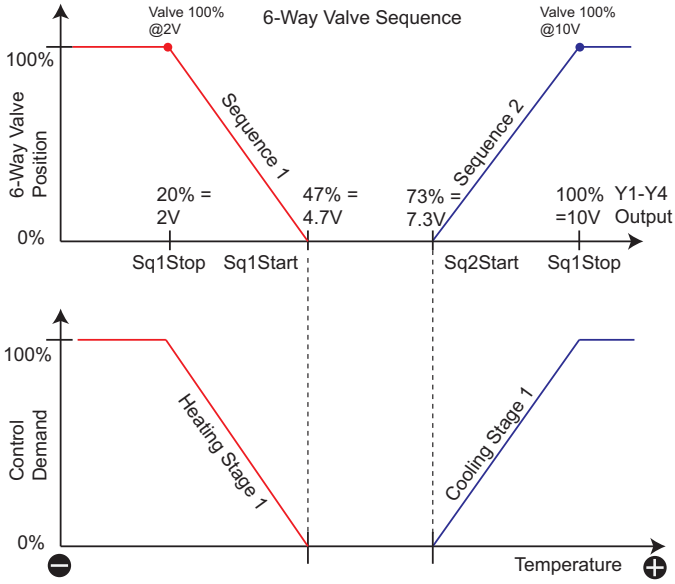

Parameter	Description	Value Range / Enumerations
Sequence 1 Start Value (Sq1Start)	6-Way Valve Sequence 1 Start Voltage. With setting '6-Way Valve' Main Loop Heating Stage 1 at 0% Demand.	0..100% (Default 47% = 4.7V)
Sequence 1 Stop Value (Sq1Stop)	6-Way Valve Sequence 1 Stop Voltage. With setting '6-Way Valve' Main Loop Heating Stage 1 at 100% Demand.	0..100% (Default 20% = 2V)
Sequence 2 Start Value (Sq2Start)	6-Way Valve Sequence 2 Start Voltage. With setting '6-Way Valve' Main Loop Cooling Stage 1 at 0% Demand.	0..100% (Default 73% = 7.3V)
Sequence 2 Stop Value (Sq2Stop)	6-Way Valve Sequence 2 Stop Voltage. With setting '6-Way Valve' Main Loop Cooling Stage 1 at 100% Demand.	0..100% (Default 100% = 10V)

Digital Output Control Options

DIGITAL TRIAC OUTPUT CONTROL OPTIONS (XCR11/XCR12/XCR13)

The xCR11 controllers have 4 x 24Vac Triacs and xCR12/xCR13 controllers have 2 x 24Vac Triacs. The triacs can operate in On/Off and PWM (Pulse-Width Modulation) and 3-Point (Raise-Lower) configurations.

3-POINT MODE

If the ThreePoint1 is activated then TR1 and TR2 are used for 3-Point control (raise-lower). TR1 is used to drive the actuator open and TR2 is used to drive the actuator close. The actuator running time and run on times are adjustable.

ThreePoint2 activates the TR3 (open) and TR4 (close) - xCR11 controllers only.

After controller reset the threepoint function drives the close triac for the run time period after which it resumes in normal operation.

PWM MODE

In the PWM mode the output is modulated using pulse-width-modulation sequence. With On/Off Mode the outputs are switched ON at '*DO On Value*' and OFF at '*DO Off Value*'.

Use TRs Direction parameter to reverse the PWM / ON-Off output.

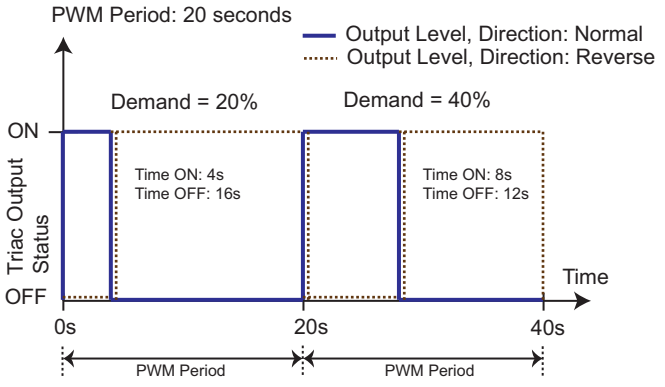

ON/OFF MODE

Set the PWM period to 0 to make the outputs to operate On/Off. The output is switched On when the demand exceeds *DO ON Value*. Output switches Off below *DO OFF Value*.

NOTE:Setting the *TR1/TR2/TR3/TR4 Mode = Network*, it is possible to override the output level using *TR1/TR2/TR3/TR4 Override Value* parameter. With Modbus models it is also possible to use Commissioning Overrides for overriding the triac output levels. With BACnet use the AV objects to override the PWM demand levels.

Parameter	Description	Value Range / Enumerations
ThreePoint1 Mode	Threepoint 1 Mode (=Source) Note: Available with xCR11, xCR12 and xCR13.	0 = None 1 = Network 2 = Heating Stage 1 3 = Heating Stage 2 4 = Heating Stage 3 5 = Cooling Stage 1 6 = Cooling Stage 2 7 = Cooling Stage 3 8 = Auxiliary Demand 9 = CO2 Demand 10 = VOC Demand 11 = Humidity Demand 12 = Max Function 1 13 = Max Function 2 14 = Fan Demand
ThreePoint2 Mode	Threepoint 2 Mode (=Source) Note: xCR11 controllers only. Note: 3-Point Control available from Fw1.38 onwards.	
ThreePoint Run Time	ThreePoint Actuator Run Time (set to match the actuator run time)	10..2400 seconds (default 90 secs)
ThreePoint RunOn Time	ThreePoint Actuator RunOn Time (overrun time when the actuator position reaches 0 or 100%)	10..240 seconds (default 10 secs)
TR1 Output Mode	Triac Output 1 Configuration Default: Heating Stage 1	0 = Network Value 1 = Heating Stage 1 2 = Heating Stage 2 3 = Heating Stage 3 4 = Cooling Stage 1 5 = Cooling Stage 2 6 = Cooling Stage 3 7 = Auxiliary Demand 8 = CO2 Demand 9 = VOC Demand 10 = Humidity/DeHum Demand 11 = Max Function 1 12 = Max Function 2 13 = Fan Speed 1 14 = Fan Speed 2 15 = Fan Speed 3 16 = Fan Demand 17 = None 18 = Occupied Mode
TR2 Output Mode	Triac Output 2 Configuration Default: Cooling Stage 1	
TR3 Output Mode (xCR11 only)	Triac Output 3 Configuration Default: Heating Stage 2	
TR4 Output Mode (xCR11 only)	Triac Output 4 Configuration Default: Cooling Stage 2 Triac Output: Options 1-12 and 16 is controlled using either PWM or ON/Off Modes Triac Output: Options 13-15 is controlled as ON/OFF based on the fan demand (Set Fan Mode = Stepped). At Fan Stage 1, Fan Speed 1 is ON. At Fan Stage 2, Fan Speed 2 is ON. Option 18 makes the triac switch on when the device is in occupied mode. In OFF/Unoccupied modes the triac is OFF.	
PWM Period	PWM Control Logic Period. The controller calculates the new sequence at these intervals. Setting the PWM period to 0, configures the output to operate as On/Off	0..180s (Default 20s)
DO ON Value	The value at the Triac (or Relay) Output Switches ON. Only applied when PWM Period is set to 0.	0..100% (Default 50%)
DO OFF Value	The value at the Triac (or Relay) Output Switches OFF	0..100% (Default 0%)
TR1 Direction	Triac Output 1 Direction	0 = Normal (Default) 1 = Reverse
TR2 Direction	Triac Output 2 Direction	
TR3 Direction	Triac Output 3 Direction (xCR11 only)	
TR4 Direction	Triac Output 4 Direction (xCR11 only)	
TR1 Type	Triac 1 Type, Pulse Width Modulation or On/Off	0 = On/Off 1 = PWM (Default)
TR2 Type	Triac 2 Type, Pulse Width Modulation or On/Off	
TR3 Type	Triac 3 Type, Pulse Width Modulation or On/Off (xCR11 only)	
TR4 Type	Triac 4 Type, Pulse Width Modulation or On/Off (xCR11 only)	

OCCUPANCY MODE

By setting the *TR Output Mode* to *Occupied Mode*, the triac output is On when the controller operates in Occupied Mode. The triac output is Off when the controller is either in Unoccupied or Off mode. The controller mode can be changed e.g. with the built-in PIR sensor.

NOTE: The switching is delayed by the time set in the *PWM Period* parameter.

Relay Output Control Options (xCR10, xCR12, xCR13, xCR14 Models)

SINGLE 24V RELAY (XCR10/XCR12) AND 230V RELAY (XCR14) CONTROL

The xCR10/xCR12 controllers can have optional 24V relay (RL-option). The xCR14 controllers have built-in 230V relay. The relay output can be configured with the following options.

Parameter	Description	Value Range / Enumerations
Relay Output	Relay Output Configuration By setting Relay = 1..12, the relay output is ON when the Demand is at 'DO On Value' and OFF when the Demand is 'DO Off Value' - See Digital Triac Output Control chapter below. By setting Relay = Fan Stage 1, the relay in ON when the Fan Demand Reaches Fan Stage 1. The relay is switched OFF when the Fan Demand is 5% less than Fan Stage 1 Demand. By Setting Relay = Occupied, the relay is ON when the controller is in Occupied Mode. By Setting Relay = Digital Input 1/2 (UI1/UI2), the relay follows the DI1/DI2 state (Set UI Mode to 4, 6, 7, 8, 9 or10)	0 = None 1 = Heating Stage 1 2 = Heating Stage 2 3 = Heating Stage 3 4 = Cooling Stage 1 5 = Cooling Stage 2 6 = Cooling Stage 3 7 = Auxiliary Demand 8 = CO2 Demand 9 = VOC Demand 10 = Humidity/DeHum Demand 11 = Max Function 1 12 = Max Function 2 13 = Fan Stage 1 14 = Occupied Mode 15 = Digital Input 1 16 = Digital Input 2
DO ON Value	The value at the Relay (or Triac) Output Switches ON. Only applied when PWM Period is set to 0.	0..100% (Default 50%)
DO OFF Value	The value at the Relay (or Triac) Output Switches OFF	0..100% (Default 0%)

The relay output can be overridden from the network using the register 582 or using BV3 on BACnet.

3-RELAY OUTPUT CONTROL OPTIONS (XCR13 MODELS ONLY)

xCR13 models have 3 x 230Vac relays that can be used for control purposes. The relays are as default configured for 3-speed fan control, but can also be independently controlled for other purposes. The relays are configured under *Relay Output Settings.*

The relays are switched on when the control source value exceed TR/RL ON Value, and the relays are switched OFF when the control source value is less than TR/RL OFF Value.

NOTE: When controlling relays using (default) *Fan Speed 1/2/3* settings, it is possible to apply delay between relay switching using *751: Fan Relay Delay* parameter (under *Fan Control*).

Parameter	Description	Value Range / Enumerations
RL1 Output Mode	Relay 1 Output Control Source Configuration Default: Fan Speed 1	0 = Network Value 1 = Heating Stage 1 2 = Heating Stage 2 3 = Cooling Stage 1 4 = Cooling Stage 2 5 = CO2 Demand 6 = Maximum VAV 7 = Fan Demand 8 = 6-Way Valve 9 = Reverse 6-Way Valve 10 = Fan Speed 1 11 = Fan Speed 2 12 = Fan Speed 3
RL2 Output Mode	Relay 2 Output Control Source Configuration Default: Fan Speed 2	
RL3 Output Mode	Relay 3 Output Control Source Configuration Default: Fan Speed 3	
TR/RL ON Value	The value at the Relay (or Triac) Output Switches ON.	0..100% (Default 50%)
TR/RL OFF Value	The value at the Relay (or Triac) Output Switches OFF	0..100% (Default 0%)

The Relay outputs can be overridden in Modbus using the Commissioning Overrides (Auto, 0%-OFF, 100%-ON), and in BACnet using the AV objects.

Output Exercise Function

The xCR10 series controllers have Valve/Output Exercise function that allows each of the outputs (Analogue, Digital) to be exercised automatically in case of inactivity (meaning output remains at 0% or 100% for the specified time). The inactivity setting can be set between 0..255 days. Each of the outputs can be individually enabled by setting the Exercise Duration parameter.

During the exercise the output remains at 0% to 100% depending on the inactivity level. After the exercise time, the next output is held off for the exercise time duration, allowing the exercise output to return under normal control.

Parameter	Description	Value Range / Enumerations
Exercise Active	Parameter reporting Exercise Mode status.	0 = None, 1=Y1, 2=Y2, 3=Y3, 4=Y4, 5=TR1, 6=TR2, 7=TR3, 8=TR4
Exercise Interval	Sets the period of inactivity to activate the corresponding output.	0..255 days (Default 0 days)
Y1 Duration	Analogue Output 1 Exercise Time. After configured period of inactivity, the output is driven to 50% for the Y1 Duration Time	0..255 Minutes (Default: 0) 0 = Disabled
Y2 Duration	Analogue Output 2 Exercise Time. After configured period of inactivity, the output is driven to 50% for the Y2 Duration Time	0..255 Minutes (Default: 0) 0 = Disabled
Y3 Duration	Analogue Output 3 Exercise Time. After configured period of inactivity, the output is driven to 50% for the Y3 Duration Time	0..255 Minutes (Default: 0) 0 = Disabled
Y4 Duration	Analogue Output 4 Exercise Time. After configured period of inactivity, the output is driven to 50% for the Y4 Duration Time	0..255 Minutes (Default: 0) 0 = Disabled
TR1 Duration	Triac Output 1 Exercise Time. After configured period of inactivity, the output is driven to opposite state for the TR1 Duration Time	0..255 Minutes (Default: 0) 0 = Disabled
TR2 Duration	Triac Output 2 Exercise Time. After configured period of inactivity, the output is driven to opposite state for the TR2 Duration Time	0..255 Minutes (Default: 0) 0 = Disabled
TR3 Duration	Triac Output 3 Exercise Time. After configured period of inactivity, the output is driven to opposite state for the TR3 Duration Time (Only xCR11)	0..255 Minutes (Default: 0) 0 = Disabled
TR4 Duration	Triac Output 4 Exercise Time. After configured period of inactivity, the output is driven to opposite state for the TR4 Duration Time (Only xCR11)	0..255 Minutes (Default: 0) 0 = Disabled

NOTE: xCR10/12/15 Series models have Y1/2/3/4, xCR11 Series Y1 and xCR14 Series Y1/2/3.

NOTE: xCR14/15 Series do not have any triacs (TR1/2/3/4).

Capacitive Touchscreen (TS Option)

The controllers can have optional full colour 240 x 320 pixel high resolution glass fronted display. The touchscreen indicates the controller status and measurements and provides the user interface. The touchscreen display elements can be tailored to the site specific requirements..

TOUCHSCREEN DISPLAY (SKIN COLOUR SELECTABLE)

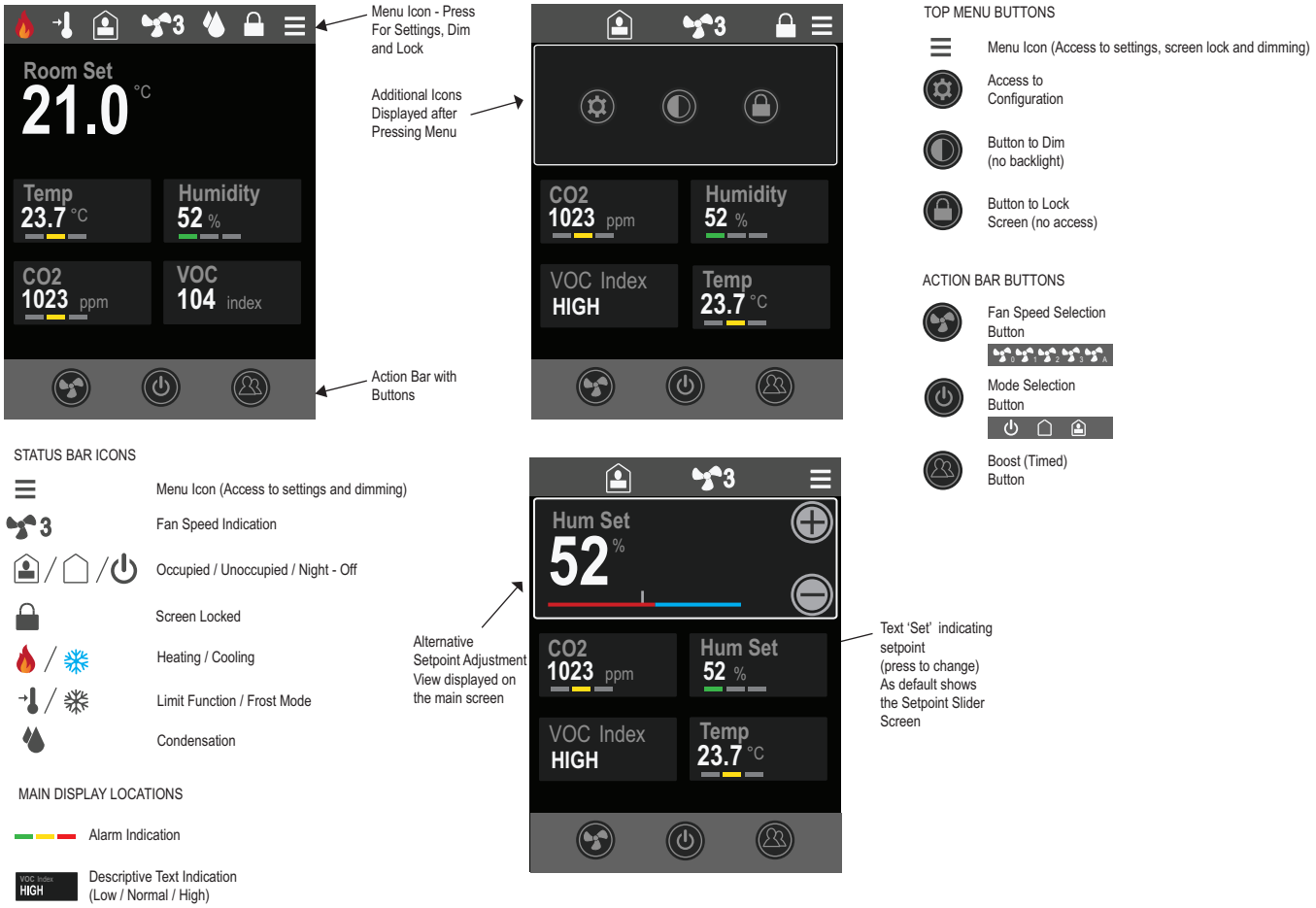

The touchscreen is divided to three different main elements; Status Bar, Measurement/Setpoint Display Locations and Buttons (accessible on the Action Bar on the bottom or via the Menu Icon on the top).

The Status Bar Indicates the controller status.

- Heating / Cooling Mode
- Limit Function / Frost Mode
- Unoccupied / Occupied / Off
- Fan Speed
- Lock Icon
- Condensation Icon
- Menu

The Controller has up to 5 different Measurement/Display Locations that can be tailored to show different measurements and setpoints. The display locations can also show alarm indications and additional information (energy, water usage) from the network. It is also possible to configure actual measurements to be in 'Descriptive Text' mode that makes the measurement information descriptive.

Each of the four display locations can be configured to show

- Main Temperature Loop, Auxiliary Loop or Humidity Setpoints
- CO2, VOC, Temperature, or Humidity Measurement
- Universal Input Measurements (0..10Vdc or NTC10)
- Network Signals (e.g. Energy, Water Consumption, Pressure, Light)
- Alarm Conditions of the Measurements (Green, Amber, Red Alarm Bar or Skin Colour Change)
- Descriptive Text instead of Measurement Value (Low / Normal / High)

- The description and units of each location can be customised
- Each location can be individually made as Read-Only (from Fw1.61)
- Using Language Pack it is possible to change the text language
- The skin colour of the display can changed according to the preference; White, Blue, Green, Grey and Black
- Brightness of the display can be adjusted
- Action Bar can have Boost button with an adjustable timer (overrides the controller output as configured), Fan speed adjustment option (A - 0 - 1 - 2 - 3), and/or Mode Button (selecting between Occupied / Unoccupied and Night Off modes)
- The display can be dimmed through the Menu button
- The display can be locked from unauthorised access through the Menu button
- Menu Button provides access to the Configuration Menu (network settings)

The screen skin colours can be changed according to the site requirements (see below examples).

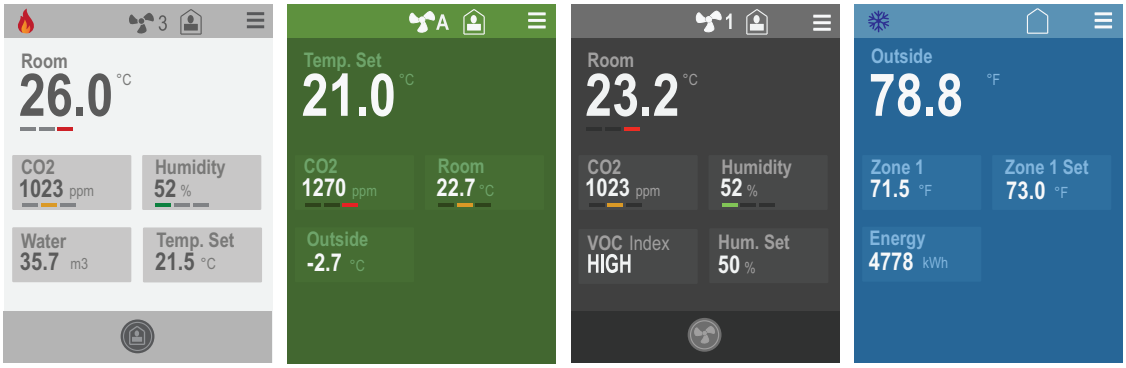

CLEAN MY ROOM AND DO NOT DISTUB BUTTONS (Fw1.80)

Fw1.80 introduces Clean My Room and Do not Disturb buttons for locations 2-5. The status of these buttons can be read over the Modbus, and linked to analogue outputs to control Corridor Display Unit.

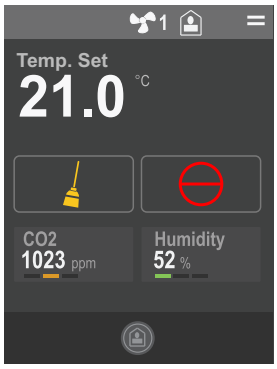

FAN SPEED ADJUSTMENT

By pressing the Fan button the fan speed adjustment options are displayed on the bottom Action Bar - select the required speed. The number of fan speeds is configurable. The current fan speed is displayed on the status bar on the top.

The Fan Speed button activation and number of fan speeds can be selected through the configuration parameters.

Enabling *Alternate Fan Adjust* parameter, the fan speed is adjusted using plus and minus buttons.

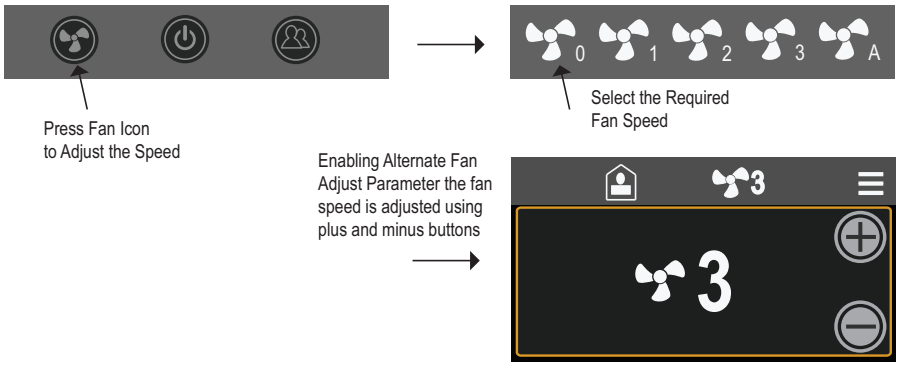

SETPOINT ADJUSTMENT

Any of the five display locations can be configured to show the main zone, the auxiliary control loop or humidity control loop setpoint. It is also possible to show the setpoint adjustment (e.g. -3 to + 3 degrees) instead of the actual calculated setpoint. As default (from Fw1.62) by pressing the setpoint field, the setpoint slider display is showed allowing it to be altered by pressing plus and minus buttons, or by using the slider. Pressing the plus or minus button continuously repeats the change with accelerating pace.

It is also possible to show the setpoint adjustment overlay on the main screen, by setting the parameter *611 Setpoint Slider Screen : 0 = Disabled*.

The User Setpoint Adjustment can be reset to 0, when the controller moves away from the Occupied mode. This can be activated by setting *684 Reset User Adjustment: 1 = On*.

The User Setpoint Adjustment can be stored in the non-volatile memory by setting *689 Store User Adjustment : 1 = Enabled* (from Fw1.65 onwards)

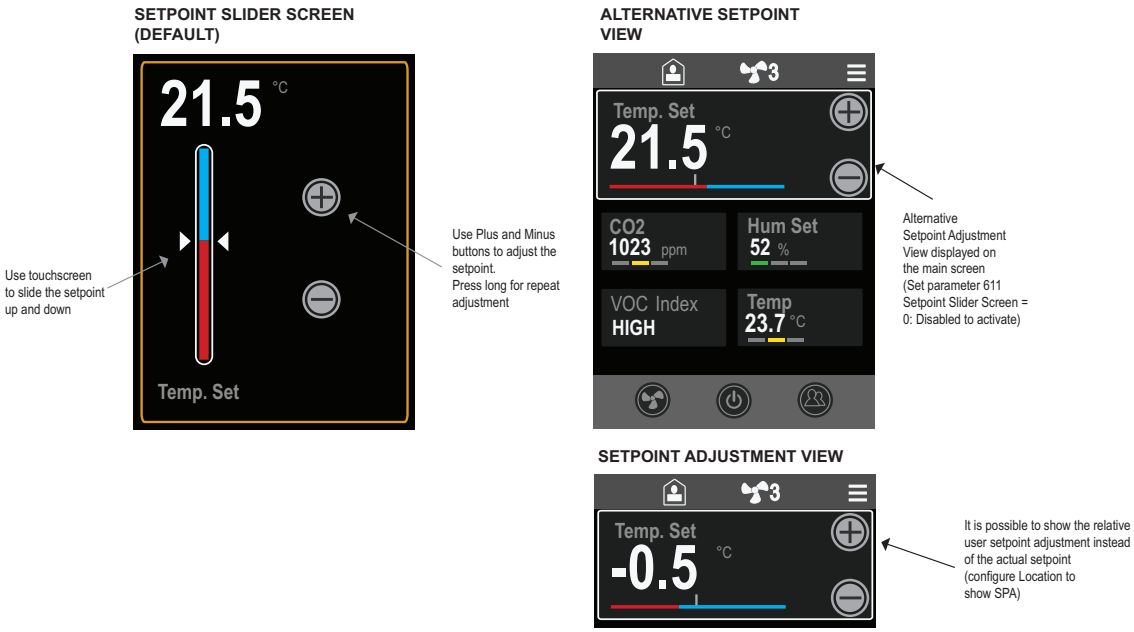

OPERATING MODE BUTTON

Pressing the Operating Mode Button the user can change the device operating mode. The operating mode button menu can be configured to show the following options for the user:

- Disabled; Button is not visible
- Occupied / Unoccupied Options Only
- Occupied / Unoccupied / Off Options (default)
- Occupied / Off Options Only

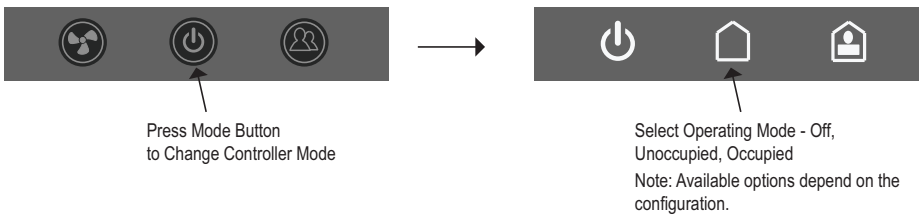

BOOST BUTTON/EXTENSION TIMER

Pressing the Boost Button (or Boost Location display with multi-step boost) the controller output or device mode (*Boost Target)* can be overridden for a timed period (*Boost Time*). Once the boost is active, the Boost Button colour changes to green indicating active boost. The boost button has adjustable timer between 0..28,800 seconds and can have multiple steps i.e. it can operate as a multi-step extension timer. Maximum Boost time is 1440 minutes i.e. 24 hours.

Any of the display locations can also configured to show the current remaining boost time in minutes.

The boost can be configured to have 1..5 steps (*Boost Steps*). If the Boost button is pressed and the Boost has multiple steps, the Multi-Step Boost adjustment window is displayed. This is also displayed if the Boost time is pressed on any of the display locations. Press + Button to extend the boost by the amount of the *Boost Time* parameter.

If only one step has been set, the boost will be activated/deactivated by pressing the Boost Button.

By setting *Boost Time* to 0 seconds, the Boost is permanent (the number of steps has no impact). The boost can be cancelled by pressing the boost button again.

The available Boost Targets are:-

- Heating Stage 1, 2 or 3 - target demand is overridden to 100% for the *Boost Time*
- Cooling Stage 1, 2 or 3 - target demand is overridden to 100% for the *Boost Time*
- Auxiliary Demand, CO2 Demand, VOC Demand, Humidity/DeHum Demand or Fan Demand - target demand is overridden to 100% for the *Boost Time*
- Occupancy Mode. Occupancy Boost overrides the controller mode to occupied period for the *Boost Time*. After the *Boost Time* the controller returns to the mode that was applied prior to the boost. If during the boost user or network overrides the controller mode, the boost is automatically canceled.

The *Boost Time*, the *Boost Steps* and the *Boost Target* are set through the configuration parameters (*Control/Control Modes and Overrides*).

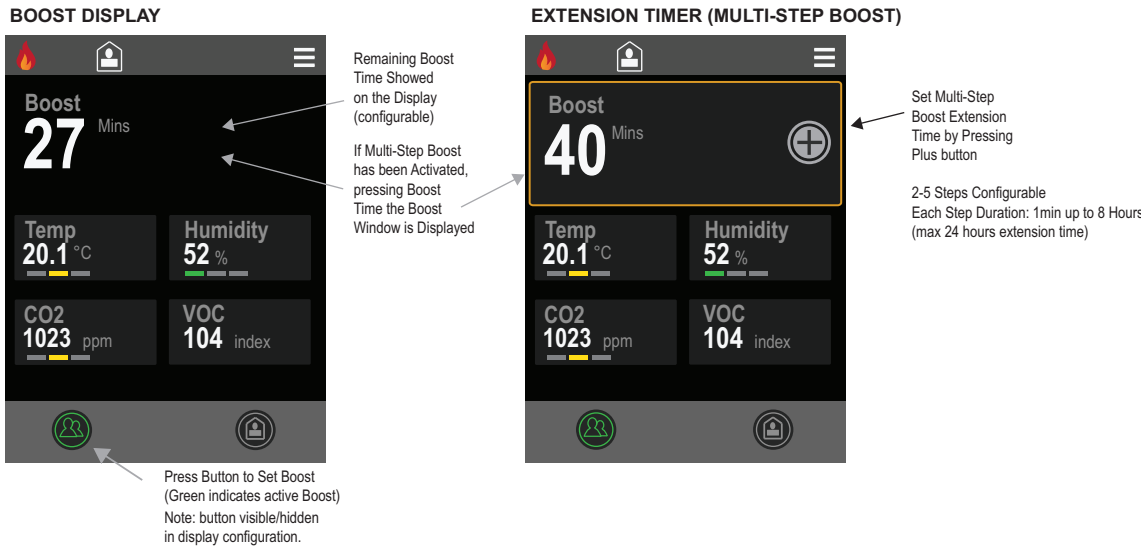

SCREEN LOCK

By selecting the Lock icon from the menu bar the screen is locked (buttons disabled, except menu and lock icons). If the Lock code is 0000, no code is required to lock and unlock the screen. By setting the lock code to any other value, the user needs to enter the code to lock and unlock the screen. From F1.78 sceen can also be automatically locked after timeout.

Note: The screen can also be locked and unlocked over the Modbus or BACnet network.

Note: The controller remembers the previous lock state after power cycle or soft reset (from Fw1.61).

Note: Using parameter *612 Autolock* it is possible to configure the screen to be automatically locked after approx. 3 minutes after unlocking (from Fw 1.78)

.

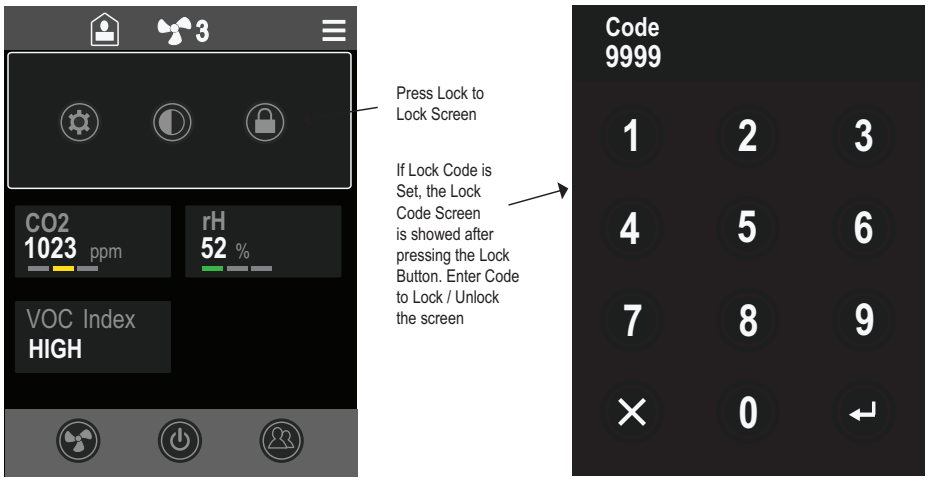

TRAFFIC LIGHT ALARM FUNCTION

Each of the 4 locations can be activated to display alarm condition based on the Amber and Red Limits. When measurement is above the Amber Limit, the location goes to Amber alarm (amber bar icon, or amber skin colour). When measurement is above the Red Limit, the location goes to Red Alarm (red bar icon or red skin colour).

ALARMING USING BAR DISPLAY

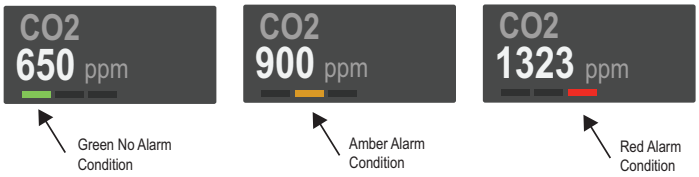

ALARMING USING SKIN COLOUR

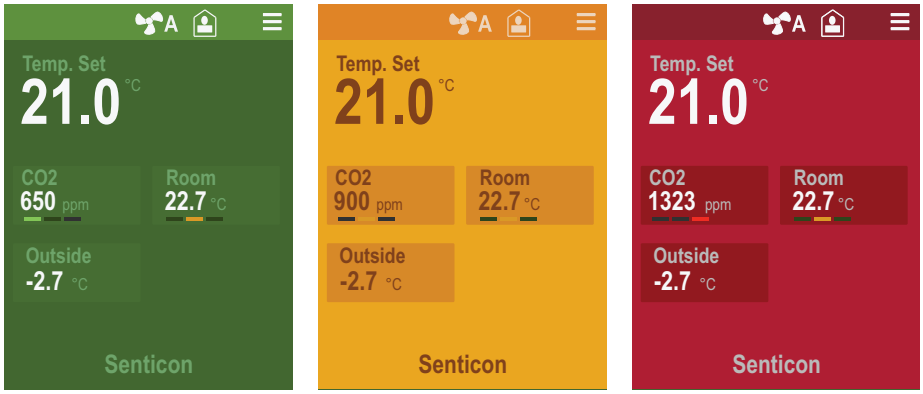

Green No Alarm Condition (Set display colour to green) | Amber Alarm Condition | Red Alarm Condition

CONFIGURATION SCREEN

To access the Configuration Screen (for network settings), Press the Configuration Icon. If the configuration code is set (anything else than 0000), the Network Settings Configuration Menu is displayed.

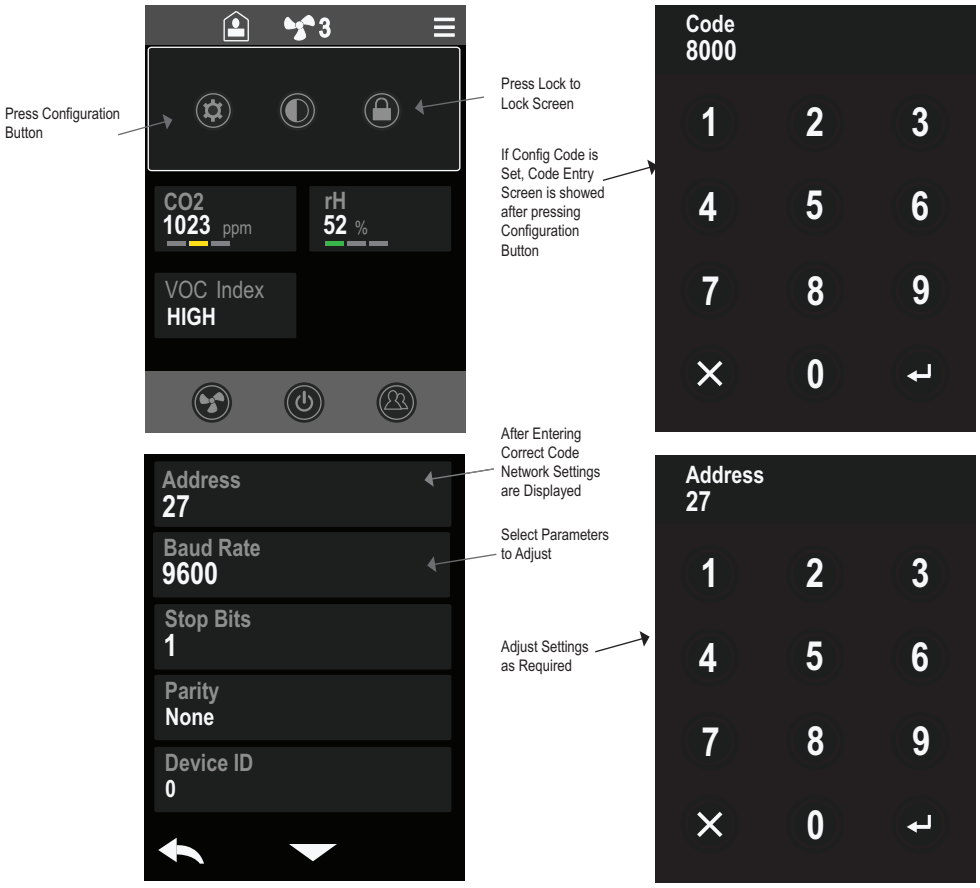

Wireless Interfaces

BLUETOOTH WIRELESS INTERFACE

With the -BLE option the devices are fitted with integrated Bluetooth Low Energy. The Bluetooth interface provides wireless connection point to SmartPhone app (iOS) to be able to interrogate and change the controller settings. Using the SmartView application the end users can change the device settings and see the current measurements. The SmartView application can be used as a complement to the display, or with non-display versions it can be used as the user interface.

NOTE: The SmartView application uses the device's display configuration to create the user view. If the device has no display, the display configuration settings can still be used to customise the user views on the App.

NOTE:With SmartConfig app you can change the devices Bluetooth name. This is also visible via the touchscreen through configuration menu (from Fw1.61).

LORAWAN® WIRELESS INTERFACE

With the -LRA option the devices are fitted with LoraWan® interface. The LoraWan® interface allows the devices to be connected to the LoraWan system wirelessly using Senticon's standard payload format.

The LoraWan® enabled devices will automatically connect to the network on power up. The connection attempts are staggered automatically based on the device serial number to ensure network performance on large systems. The devices will automatically send the device information (temperature, humidity, CO2, VOC, input and output levels and setpoints) on Senticon's Standard Payload format (up to 12 values) on scheduled intervals (1 to 60 minutes, default 10 minutes). The content of the payload message can be configured to include any controller parameter. It is also possible to write to any parameter on the device using Senticon's packaged write message - please refer to Senticon LoraWan Payload Specification for further details.

LoraWan network settings can be adjusted for maximised wireless network performance. These settings include Transmission interval, Confirmed Message Interval, Number of Failed Uplink Messages, Burst Reconnect Mode and ADR disable.

Device Setup and Modbus/BACnet Communications

The devices are available with Modbus RTU or BACnet MS/TP communication for system integration. Please also note that the devices can configured via Modbus or via BACnet MS/TP. Alternatively the devices can be configured locally using via PC Based Smart Config Tool or via iOS Smart Phone Application. Using any of these methods the device settings can be altered to suit the site requirements and the current device status can be interrogated.

Modbus and BACnet communication is carried out over RS485 serial network.

The Windows Smart Config Tool and iOS Smart Phone Application are connected to the device using Bluetooth dongle set (BLE-TOOLSET) that are plugged into the PC USB port and to the device (connection to device illustrated below). If the device is supplied with Built-In Bluetooth App interface (an option), then this can also be used for the tool communication connection

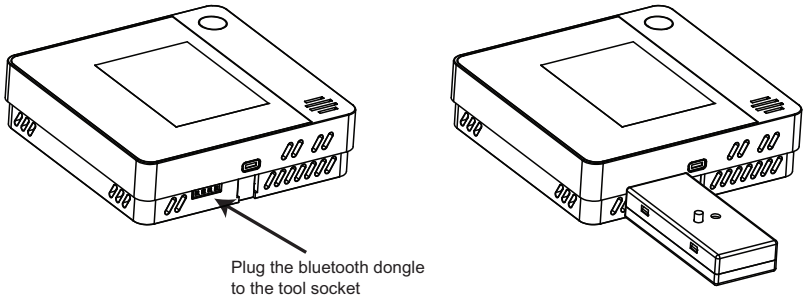

MODBUS / BACNET NETWORK SETUP

NOTE: Modbus RS485 or BACnet MS/TP versions are hardware specific models. It is not possible to change the communication protocol on the device. Please make sure to order the required model.

The devices can operate either as Modbus RTU RS485 slave device, or BACnet MS/TP Server. The device (slave/MAC) address and baud rate (limited) are set up from display or through Windows Smart Configuration Tool / iOS Smart Phone App, or via bit switches for xCR10/xCR11 series.

xCR10/xCR11 SERIES BIT SWITCH

With xCR10/xCR11 series the address is also possible to set up using the bit switch. Follow the below guidelines.

Bit switches 1-7 act as a binary decoder to set the (slave/MAC) address. Set these bit switches to OFF position if the address is configured by the software.

Bit switches 8 and 9 are used to set the baud rate. Set these bit switches to OFF position if the baud rate is configured by the software.

Bit switch EOL is used to activate 120 Ohm RS485 network End of Line termination (only used on the end of line devices).

NOTE: Once bit switches are changed the device will automatically carry out soft reset to activate the new settings.

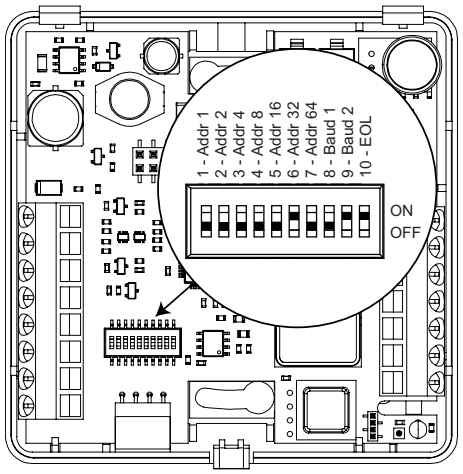

Baud Rate Setup

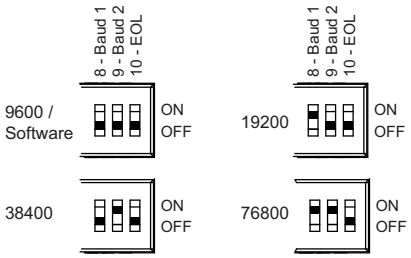

Address Setup Example

Bit switches 1 - 7 with binary decoding set the address. E.g.
Address 19 = Bit switches 1, 2 and 5 ON (1 + 2 + 16 = 19)

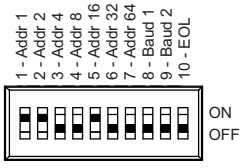

DEVICES CONFIGURATION PARAMETERS

NOTE: Reg Field shows the Modbus register offset. The Reg field number is also the same with BACnet Device Configuration Objects. The register numbers are also used with the tools and LoraWan communications.

NOTE: Please note that Modbus register addresses start with 0 (0-based). If your Modbus master addresses start from one (1), then you will need to add one to the register values. If your Modbus master uses zero based addressing then the registers can be used as is.

NOTE: BACnet configuration parameter addresses are split to multiple instances of the Device Configuration object.

NOTE: If the configuration parameters are changed over the Modbus or BACnet using third party tools such as Modbus clients or Yabe for BACnet, please ensure that System Parameter 811 - Persist is applied after the configuration to store the new settings permanently.

LIVE DATA						
		MODBUS INPUT REGISTERS - FUNCTION CODE 04 MODBUS HOLDING REGISTER - FUNCTION CODES 03, (06), 16				
Parameter	**Description**	**Reg**	**Type**	**Data Range (multiplier)**	**Value Range / Enumerations**	**R/W**
INPUTS						
Temperature Sensor	Displays current temperature measurement reading (built-in sensor) Note: Value depends on the temperature unit °C/°F selection	**400**	int16	-400..2480 (x10)	-40.0..120.0°C / -40.0..248.0°F	R
Humidity Sensor	Diplays current humidity measurement reading (With RH option)	**401**	uint16	0..1000 (x10)	0..100%rH	R
CO2 Sensor	Displays current measurement CO2 reading (QCR controllers)	**402**	uint16	0..10,000 (x1)	0..10,000ppm	R
VOC Sensor	Display current VOC (Volatile Organic Compound) Index Value	**403**	uint16	0..500 (x1)	0..500 index	R
Dew Point	Dew Point Temperature (requires RH option)	**404**	int16	-400..1200 (x10)	-40.0..120.0°C	R
UI1	Universal Input 1 Measurement Note: Value depends on the temperature / mode selection	**410**	int16	-400..2480 (x10)	NTC Mode: -40..120° AI Mode: 0..100% = 0..10V kOhms Mode: 0.2..500kOhms	R
UI2	Universal Input 2 Measurement Note: Value depends on the temperature / mode selection	**411**	int16	-400..2480 (x10)	NTC Mode: -40..120° AI Mode: 0..100% = 0..10V kOhms Mode: 0.2..500kOhms	R
Average Temperature	Calculated Average Temperature	**419**	int16	-400..2480 (x10)	NTC Mode: -40..120°	R
		DISCRETE INPUTS - FUNCTION CODE 02				
DI1	Digital Input 1 Status	**200**		0..1	0..1	R
DI2	Digital Input 2 Status	**201**		0..1	0..1	R
PIR Status	PIR (OE Option) Status	**202**		0..1	0..1	R
Boost Status	Boost Button Status (TS Option) - Shows if Boost Button has been activated by the user.	**204**		0..1	0 = No Boost 1 = Boost	R
Screen Lock Status	Screen Lock Status	**205**		0..1	0 = Not Locked 1 = Locked	R
OUTPUTS						
Y1	Analogue Output 1 Value	**412**	uint16	0..1000 (x10)	0..100% = 0..10V	R
Y2	Analogue Output 2 Value (xCR10/xCR12/xCR14/xCR15)	**413**	uint16	0..1000 (x10)	0..100% = 0..10V	R
Y3	Analogue Output 3 Value (xCR10/xCR12/xCR14/xCR15)	**414**	uint16	0..1000 (x10)	0..100% = 0..10V	R
Y4	Analogue Output 4 Value (xCR10/xCR12/xCR15)	**415**	uint16	0..1000 (x10)	0..100% = 0..10V	R
ThreePoint1 Position	Three Point 1 valve control current target position (Drives TR1 open and TR2 close)	**416**	uint16	0..1000 (x10)	0..100%	R
ThreePoint2 Position	Three Point 2 valve control current target position (Drives TR3 open and TR4 close) - xCR11 only.	**417**	uint16	0..1000 (x10)	0..100%	R
Exercise Active	Reports Output that is in the Exercise Mode	**418**	unit16	0..8 (x1)	0 = None, 1=Y1, 2=Y2, 3=Y3, 4=Y4, 5=TR1, 6=TR2, 7=TR3, 8=TR4	R
		DISCRETE INPUTS - FUNCTION CODE 02				
Relay Status	Relay Output Status (RL Option) - xCR10/xCR12/xCR14	**203**		0..1	0..1	R
Triac 1 Status	Triac 1 Output Status (xCR11/xCR12)	**206**		0..1	0..1	R

Triac 2 Status	Triac 2 Output Status (xCR11/xCR12)	**207**		0..1	0..1	R
Triac 3 Status	Triac 3 Output Status (xCR11 Only)	**208**		0..1	0..1	R
Triac 4 Status	Triac 4 Output Status (xCR11 Only)	**209**		0..1	0..1	R
DEMAND SIGNALS						
Calculated Multi-Stage Setpoint	Calculated Setpoint (Nominal Network Setpoint + User Adjustment) for Multi-Stage Control Loop **Note:** Read/write Modbus parameter. Writing to Reg420 sets 701 Nominal Setpoint to this value, and the user adjustment Reg790 is reset to 0.	**420**	int16	-32000..32000 (x10)	-3200.0..3200.0	R/W
Calculated Aux Setpoint	Calculated Setpoint (Nominal Network Setpoint + User Adjustment) for Auxiliary Control Loop **Note:** Read/write Modbus parameter. Writing to Reg421 sets 715 Nominal Setpoint to this value, and the user adjustment is reset to 0.	**421**	int16	-32000..32000 (x10)	-3200.0..3200.0	R/W
Heating Demand	Heating Stage Demand (Multi-Loop Heating Stage 1/2/3)	**422**	int16	0..1000 (x10)	0..100%	R
Cooling Demand	Cooling Stage Demand (Multi-Loop Cooling Stage 1/2/3)	**423**	int16	0..1000 (x10)	0..100%	R
Current Control Mode	Current Control Mode Status	**424**	int16	0..2 (x1)	0 = Occupied 1 = Unoccupied 2 = Night	R
Cooling Status	Main Loop Cooling Stage Override Status	**425**	int16	0..3 (x1)	0 = Normal Operation 1 = Digital Input Disable (Condensation) 2 = Dew Point Disable (Condensation) 3 = Dehumidify (Cooling Stage 2 Overridden ON)	R
Aux Demand	Auxiliary Loop Demand	**426**	int16	0..1000 (x10)	0..100%	R
Fan Demand	Fan Loop Demand	**427**	int16	0..1000 (x10)	0..100%	R
CO2 Demand	CO2 Loop Demand	**428**	int16	0..1000 (x10)	0..100%	R
Humidity Demand	Humidity Control Loop Demand	**429**	int16	0..1000 (x10)	0..100%	R
VOC Demand	VOC Control Loop Demand	**430**	int16	0..1000 (x10)	0..100%	R
Triac 1 PWM Demand	Triac Output 1 PWM Demand (xCR11/12 Series) Note: For On/Off Mode shows 0% when Off and 100% when On.	**431**	int16	0..1000 (x10)	0..100%	R
Triac 2 PWM Demand	Triac Output 2 PWM Demand (xCR11/12 Series)	**432**	int16	0..1000 (x10)	0..100%	R
Triac 3 PWM Demand	Triac Output 3 PWM Demand (xCR11 Series)	**433**	int16	0..1000 (x10)	0..100%	R
Triac 4 PWM Demand	Triac Output 4 PWM Demand (xCR11 Series)	**434**	int16	0..1000 (x10)	0..100%	R
3-Point 1 Demand	ThreePoint 1 Demand	**435**	int16	0..1000 (x10)	0..100%	R
3-Point 2 Demand	ThreePoint 2 Demand (xCR11 Series)	**436**	int16	0..1000 (x10)	0..100%	R
Fan Mode	Current Fan Mode	**437**	int16	0..4 (x1)	0 = Off 1 = Manual Speed 1 2 = Manual Speed 2 3 = Manual Speed 3 4 = Auto	R
Boost Time	Remaining Boost Time (Fw 1.76)	**438**	int16	0..480 (x1)	0..480 minutes	R

ALARM STATUS (from Fw1.77)						
		Modbus Register / BACnet Property	**MODBUS HOLDING REGISTER - FUNCTION CODES 03, 06, 16**			
Location 1 Status	Display Location 1 Alarm Status Note: Set Amber and Red Alarm limits in display settings.	**461**	int16	0..2 (x1)	0 = Green 1 = Amber 2 = Red	R
Location 2 Status	Display Location 2 Alarm Status	**462**	int16	0..2 (x1)		R
Location 3 Status	Display Location 3 Alarm Status	**463**	int16	0..2 (x1)		R
Location 5 Status	Display Location 4 Alarm Status	**464**	int16	0..2 (x1)		R
Location 5 Status	Display Location 5 Alarm Status	**465**	int16	0..2 (x1)		R
		DISCRETE INPUTS - FUNCTION CODE 02				
Loc 1 Red Alarm	Location 1 Red Alarm Status Note: Set Red Alarm limit and hysteresis in display settings.	**211**		0..1	0 = No Red Alarm 1 = Red Alarm	R
Loc 2 Red Alarm	Location 2 Red Alarm Status	**212**		0..1	0 = No Red Alarm 1 = Red Alarm	R
Loc 3 Red Alarm	Location 3 Red Alarm Status	**213**		0..1	0 = No Red Alarm 1 = Red Alarm	R
Loc 4 Red Alarm	Location 4 Red Alarm Status	**214**		0..1	0 = No Red Alarm 1 = Red Alarm	R
Loc 5 Red Alarm	Location 5 Red Alarm Status	**215**		0..1	0 = No Red Alarm 1 = Red Alarm	R

ROOM STATUS (from Fw1.80)						
		Modbus Register / BACnet Property	**MODBUS HOLDING REGISTER - FUNCTION CODES 03, 06, 16**			
Clean	Clean My Room Button Status (Override) Note: Use Control/Room Status for Tool Overrides	**660**	int16	0..1 (x1)	0 = Off 1 = On	R
DoNotDisturb	Do Not Disturb Button Status (Override)	**660**	int16	0..1 (x1)	0 = Off 1 = On	R

INPUT/OUTPUT SETTINGS						
		Modbus Register / BACnet Property	**MODBUS HOLDING REGISTER - FUNCTION CODES 03, 06, 16**			
Parameter	**Description**		**Type**	**Data Range (multiplier)**	**Value Range / Enumerations**	**R/W**
UNIVERSAL INPUTS						
UI1 Voltage Min.	Sets Min. Clamp Voltage for UI1.	**516**	unit16	0..100 (x10)	0..10.0 (Default 0)	R/W
UI1 Voltage Max.	Sets Max. Clamp Voltage for UI1. Use only if the connected device upper range is more than 3000.	**517**	unit16	0..100 (x10)	0..10.0 (Default 10.0)	R/W
UI2 Voltage Min.	Sets Min. Clamp Voltage for UI2. Advanced Setting.	**518**	unit16	0..100 (x10)	0..10.0 (Default 0)	R/W
UI2 Voltage Max.	Sets Max. Clamp Voltage for UI2. Use only if the connected device upper range is more than 3000.	**519**	unit16	0..100 (x10)	0..10.0 (Default 10.0)	R/W

UI1 Mode	Sets the Universal Input 1 Mode	**520**	unit16	0..12 (x1)	0 = Not Used 1 = 0..10V (0..100%) 2 = NTC10 (Default) 3 = Dew Point (NTC10) 4 = Digital - Network 5 = Digital - Disable Cooling / Resistive Condensation Sensor 6 = Digital - Occupied 7 = Digital - Unoccupied 8 = Digital - Off 9 = Digital - Unoccupied / Occupied 10 = Digital - Off / Occupied 11 = Digital - Off / UI State 12 = Resistive - kOhms	R/W
UI2 Mode	Sets the Universal Input 2 Mode. **Note:** Option 6 remembers the last state and when the input opens the controller returns to this state (OFF or Unoccupied) **Note:** Options 7 and 8 override to selected controller mode on OFF to ON transition. **Note**: Option 9 overrides to Occupied Mode on ON transition and Unoccupied Mode on OFF transition (if the controller is in the OFF operating mode the input is disabled - no impact). **Note:** Option 10 overrides to Occupied Mode on ON transition and Off Mode on OFF transition. **Note**: Digital - Off / UI State overrides the controller at ON transition to the state of the other Digital Input (DI1/DI2) If DI is OFF then the controller goes to unoccupied, and if ON the controller goes to occupied mode.	**521**	unit16	0..12 (x1)		R/W
Temperature Units	Sets the temperature measurement and display to operate in Celsius or Fahrenheit. Note: To show Fahrenheit on display set the correct Unit setting on the display.	**522**	unit16	0..1 (x1)	0 = Celsius (Default) 1 = Fahrenheit	R/W
UI1 Scale Min.	Sets the scaling for Min. Measurement when UI1 @ 0V (0%)	**523**	unit16	0..30000 (x10)	0.0..3000.0 (Default 0)	R/W
UI1 Scale Max.	Sets scaling for the Max. Measurement when UI1 @ 10V (100%)	**524**	unit16	0..30000 (x10)	0.0..3000.0 (Default 100.0)	R/W
UI2 Scale Min.	Sets the scaling for Min. Measurement when UI2 @ 0V (0%)	**525**	unit16	0..30000 (x10)	0.0..3000.0 (Default 0)	R/W
UI2 Scale Max.	Sets scaling for the Max. Measurement when UI2 @ 10V (100%)	**526**	unit16	0..30000 (x10)	0.0..3000.0 (Default 100.0)	R/W
UI1 Digital Polarity	UI1 Digital Input Polarity Setting - allows the polarity of the input operation to be reversed when used in digital modes.	**527**	unit16	0..1 (x1)	0 = Normal (Default) 1 = Reverse	R/W
UI2 Digital Polarity	UI2 Digital Input Polarity Setting - allows the polarity of the input operation to be reversed when used in digital modes..	**528**	unit16	0..1 (x1)	0 = Normal (Default) 1 = Reverse	R/W

ANALOGUE OUTPUTS						
Y1 Mode	Y1 Output Configuration Default: Heating Stage 1	**530**	unit16	0..19 (x1)	0 = Network Value 1 = Heating Stage 1 2 = Heating Stage 2 3 = Heating Stage 3 4 = Cooling Stage 1 5 = Cooling Stage 2 6 = Cooling Stage 3 7 = Auxiliary Demand 8 = CO2 Demand 9 = VOC Demand 10 = Humidity Demand 11 = Max Function 1 12 = Max Function 2 13 = Fan Demand 14 = 6-Way Valve 15 = Reverse 6-Way Valve 16 = Fan Speed 1 (10V) 17 = Fan Speed 2 (10V) 18 = Fan Speed 3 (10V) 19 = Corridor Interface	R/W
Y2 Mode	Y2 Output Configuration (xCR10/xCR12/xCR14/xCR15) Default: Cooling Stage 1	**531**	unit16	0..19 (x1)		R/W
Y3 Mode	Y3 Output Configuration (xCR10/xCR12/xCR14/xCR15) Default: Fan Speed Control	**532**	unit16	0..19 (x1)		R/W
Y4 Mode	Y4 Output Configuration (xCR10/xCR12/xCR15) Default: CO2 Control Note: For Modus to override the output from the network set the mode to network. Note: For BACnet the output can be overridden using corresponding AV objects. Note: Options 16,17,18; by setting the Fan Mode = Stepped, the output is overridden to 100% (10V) when at the selected speed. Note: Option 19 Corridor interface outputs, 35%=Clean, 65%=DND, 95%=Both	**533**	unit16	0..19 (x1)		R/W
Y1 Override	Analogue Output Y1 Override Value	**534**	unit16	0..1000 (x10)	0.0..100.0% (Default 0)	R/W
Y2 Override	Analogue Output Y2 Override Value (xCR10/12/14/15)	**535**	unit16	0..1000 (x10)	0.0..100.0% (Default 0)	R/W
Y3 Override	Analogue Output Y3 Override Value (xCR10/12/14/15)	**536**	unit16	0..1000 (x10)	0.0..100.0% (Default 0)	R/W
Y4 Override	Analogue Output Y4 Override Value (xCR10/12/15)	**537**	unit16	0..1000 (x10)	0.0..100.0% (Default 0)	R/W
Network Value 1	Network Value 1. Used for control loop external measurements and display functions.	**538**	int16	-9990..9990 (x10)	-999.0..999.0 (Default 0)	R/W
Network Value 2	Network Value 2 (for displaying network integer value e.g. energy measurements)	**539**	uint16	0..65535 (x1)	0..65535 (Default 0)	R/W
Y1 Minimum	Y1 Output Minimum Level	**540**	unit16	0..1000 (x10)	0.0..100.0% (Default 0%)	R/W
Y1 Maximum	Y1 Output Maximum Level	**541**	unit16	0..1000 (x10)	0.0..100.0% (Default 100%)	R/W
Y2 Minimum	Y2 Output Minimum Level (xCR10/12/14/15)	**542**	unit16	0..1000 (x10)	0.0..100.0% (Default 0%)	R/W
Y2 Maximum	Y2 Output Maximum Level (xCR10/12/14/15)	**543**	unit16	0..1000 (x10)	0.0..100.0% (Default 100%)	R/W
Y3 Minimum	Y3 Output Minimum Level (xCR10/12/14/15)	**544**	unit16	0..1000 (x10)	0.0..100.0% (Default 0%)	R/W
Y3 Maximum	Y3 Output Maximum Level (xCR10/12/14/15)	**545**	unit16	0..1000 (x10)	0.0..100.0% (Default 100%)	R/W
Y4 Minimum	Y4 Output Minimum Level (xCR10/12/15)	**546**	unit16	0..1000 (x10)	0.0..100.0% (Default 0%)	R/W
Y4 Maximum	Y4 Output Maximum Level (xCR10/12/15)	**547**	unit16	0..1000 (x10)	0.0..100.0% (Default 100%)	R/W

Sequence 1 Start Value (Sq1Start)	6-Way Valve Sequence 1 Start Voltage. With setting '6-Way Valve' Main Loop Heating Stage 1 at 0% Demand.	**548**	unit16	0..100 (x10)	0..100% (Default 47%)	R/W
Sequence 1 Stop Value (Sq1Stop)	6-Way Valve Sequence 1 Stop Voltage. With setting '6-Way Valve' Main Loop Heating Stage 1 at 100% Demand.	**549**	unit16	0..100 (x10)	0..100% (Default 20%)	R/W
Sequence 2 Start Value (Sq2Start)	6-Way Valve Sequence 2 Start Voltage. With setting '6-Way Valve' Main Loop Cooling Stage 1 at 0% Demand.	**550**	unit16	0..100 (x10)	0..100% (Default 73%)	R/W
Sequence 2 Stop Value (Sq2Stop)	6-Way Valve Sequence 2 Stop Voltage. With setting '6-Way Valve' Main Loop Cooling Stage 1 at 100% Demand.	**551**	unit16	0..100 (x10)	0..100% (Default 100%)	R/W

DIGITAL INPUTS						
DI1 Off Delay	Delay Off Timer for the Universal Input 1 in Digital Input Mode	**560**	uint16	0..28,800 (x1)	0..28,800 seconds (default 0 secs)	R/W
DI2 Off Delay	Delay Off Timer for the Universal Input 2 in Digital Input Mode	**561**	uint16	0..28,800 (x1)	0..28,800 seconds (default 0 secs)	R/W
PIR Trigger Mode	Selects the Mode of the PIR Sensor	**685**	uint16	0..1 (x1)	0 - Standard (default) 1 - Multi-Trigger	R/W
PIR Trigger Count	Trigger Count in Multi-Trigger Mode	**686**	uint16	1..10 (x1)	1..10 (default 3)	R/W
Trigger Period	Trigger Period for monitoring Trigger Count	**687**	uint16	30..1,800 (x1)	30.1,800 seconds (default 300 secs)	R/W
PIR Off Delay	Delay Off Timer for the PIR Movement/Occupancy sensor	**562**	uint16	10..28,800 (x1)	10..28,800 seconds (default 600 secs)	R/W

DIGITAL OUTPUTS						
ThreePoint1 Mode	Threepoint 1 Mode (=Source) (xCR11/xCR12 Series)	**566**	uint16	0..14 (x1)	0 = None 1 = Network 2 = Heating Stage 1 3 = Heating Stage 2 4 = Heating Stage 3 5 = Cooling Stage 1 6 = Cooling Stage 2 7 = Cooling Stage 3 8 = Auxiliary Demand 9 = CO2 Demand 10 = VOC Demand 11 = Humidity Demand 12 = Max Function 1 13 = Max Function 2 14 = Fan Demand	R/W
ThreePoint2 Mode	Threepoint 2 Mode (=Source) Note: xCR11 Series only. Note: 3-Point Control available from Fw1.38 onwards.	**567**	uint16	0..14 (x1)		
ThreePoint Run Time	ThreePoint Actuator Run Time (set to match the actuator run time)	**568**	uint16	10..2,400 (x1)	10..2400 seconds (default 90 secs)	R/W
ThreePoint RunOn Time	ThreePoint Actuator RunOn Time (overrun time when the actuator position reaches 0 or 100%)	**569**	uint16	10..240 (x1)	10..240 seconds (default 10 secs)	R/W
TR1 Output Mode	Triac Output 1 Configuration (xCR11/xCR12) Default: Heating Stage 1	**570**	uint16	0..18 (x1)	0 = Network 1 = Heating Stage 1 2 = Heating Stage 2 3 = Heating Stage 3 4 = Cooling Stage 1 5 = Cooling Stage 2 6 = Cooling Stage 3 7 = Auxiliary Demand 8 = CO2 Demand 9 = VOC Demand 10 = Humidity Demand 11 = Max Function 1 12 = Max Function 2 13 = Fan Speed 1 14 = Fan Speed 2 15 = Fan Speed 3 16 = Fan Demand 17 = None 18 = Occupied Mode	R/W
TR2 Output Mode	Triac Output 2 Configuration (xCR11/xCR12) Default: Cooling Stage 1	**571**	uint16	0..18 (x1)		R/W
TR3 Output Mode (xCR11)	Triac Output 3 Configuration (xCR11 only) Default: Heating Stage 2	**572**	uint16	0..18 (x1)		R/W
TR4 Output Mode	Triac Output 4 Configuration (xCR11 only) Default: Cooling Stage 2 Triac Output: Options 1-12 and 16 is controlled using either PWM or ON/Off Modes Triac Output: Options 13-15 is controlled as ON/OFF based on the fan demand (Set Fan Mode = Stepped). At Fan Stage 1, Fan Speed 1 is ON. At Fan Stage 2, Fan Speed 2 is ON. Option 18 makes the triac switch on when the device is in occupied mode. In OFF/Unoccupied modes the triac is OFF.	**573**	uint16	0..18 (x1)		R/W
PWM Period	PWM Control Logic Period. The controller calculates the new sequence at these intervals. Setting the PWM period to 0, configures the output to operate as On/Off using 'DO ON' and 'DO OFF' Values.	**574**	uint16	0..180 (x1)	0..180s (Default 20s)	R/W

TR/RL ON Value	The value at the Triac (or Relay) Output Switches ON	**575**	unit16	0..100 (x1)	0..100% (Default 50%)	
TR/RL OFF Value	The value at the Triac (or Relay) Output Switches OFF	**576**	unit16	0..100 (x1)	0..100% (Default 0%)	R/W
TR1 Direction	Triac Output 1 Direction (xCR11/xCR12)	**577**	uint16	0..1 (x1)	0 = Normal (Default) 1 = Reverse	R/W
TR2 Direction	Triac Output 2 Direction (xCR11/xCR12)	**578**	uint16	0..1 (x1)	0 = Normal (Default) 1 = Reverse	R/W
TR3 Direction	Triac Output 3 Direction (xCR11 only)	**579**	uint16	0..1 (x1)	0 = Normal (Default) 1 = Reverse	R/W
TR4 Direction	Triac Output 4 Direction (xCR11 only)	**580**	uint16	0..1 (x1)	0 = Normal (Default) 1 = Reverse	R/W
Triac 1 / ThreePoint 1 Level Override	Triac 1 Output (PWM) Network Override (xCR11 Range Only) or 3-Point Actuator Override Level Note: Set output to Network	**583**	uint16	0..100 (x1)	PWM: 0% = OFF (default) 100% = ON 1%.99% = ON/OFF based on Pulse Width Modulation Settings 3-Point: 0..100%	R/W
Triac 2 Level Override	Triac 2 Output (PWM) Network Override (xCR11 Range Only) Note: Set output to Network	**584**	uint16	0..100 (x1)		R/W
Triac 3 / ThreePoint2 Level Override	Triac 3 Output (PWM) Network Override (xCR11 Range Only) or 3-Point Actuator Override Level Note: Set output to Network	**585**	uint16	0..100 (x1)		R/W
Triac 4 Level Override	Triac 4 Output (PWM) Network Override (xCR11 Range Only) Note: Set output to Network	**586**	uint16	0..100 (x1)		R/W
TR1 Type	Triac 1 Type (xCR11/xCR12)	**555**	uint16	0..1 (x1)	0 = On-Off 1 = PWM (Default)	R/W
TR2 Type	Triac 2 Type (xCR11/xCR12)	**556**	uint16	0..1 (x1)		
TR3 Type	Triac 3 Type (xCR11 only)	**557**	uint16	0..1 (x1)		
TR4 Type	Triac 4 Type (xCR11 only)	**558**	uint16	0..1 (x1)		

xCR10/xCR12/xCR14 RELAY OUTPUT SETTINGS						
Relay Control Mode	Relay Output Configuration (RL Option) By setting Relay = 1..13, the relay output is ON when the Demand is at 'DO On Value' and OFF when the Demand is 'DO Off Value' - See PWM - ON/Off Control By Setting Relay = Occupied, the relay is ON when the controller is in Occupied Mode. By Setting Relay = Digital Input 1/2 (UI1/UI2), the relay follows the DI1/DI2 state (Set UI Mode to 4, 6, 7, 8, 9 or10).	**581**	uint16	0..16 (x1)	0 = None (default) 1 = Heating Stage 1 2 = Heating Stage 2 3 = Heating Stage 3 4 = Cooling Stage 1 5 = Cooling Stage 2 6 = Cooling Stage 3 7 = Auxiliary Demand 8 = CO2 Demand 9 = VOC Demand 10 = Humidity Demand 11 = Max Function 1 12 = Max Function 2 13 = Fan Demand 14 = Occupied Mode 15 = Digital Input 1 16 = Digital Input 2	R/W
Relay Override	Overrides the current output status of the relay permanently (overrides the local control, RL Option xCR10 Range Only).	**582**	uint16	0..2 (x1)	0 = No override (default) 1 = Override OFF 2 = Override ON	R/W
TR/RL ON Value	The value at the Relay (or triac) Output Switches ON Note: Used also for triac outputs.	**575**	unit16	0..100 (x1)	0..100% (Default 50%)	
TR/RL OFF Value	The value at the Relay (or triac) Output Switches OFF Note: Used also for triac outputs.	**576**	unit16	0..100 (x1)	0..100% (Default 0%)	R/W

xCR13 RELAY OUTPUT SETTINGS						
RL1 Output Mode	Relay 1 Output Source Configuration (xCR13 Only Default: Fan Speed 1	**531**	unit16	0..12 (x1)	0 = Network Value 1 = Heating Stage 1 2 = Heating Stage 2 3 = Cooling Stage 1 4 = Cooling Stage 2 5 = CO2 Demand 6 = Maximum VAV 7 = Fan Demand 8 = 6-Way Valve 9 = Reverse 6-Way Valve 10 = Fan Speed 1 11 = Fan Speed 2 12 = Fan Speed 3	R/W
RL2 Output Mode	Relay 2 Output Source Configuration (xCR13 Only Default: Fan Speed 2	**532**	unit16	0..12 (x1)		R/W
RL3 Output Mode	Relay 3 Output Source Configuration (xCR13 Only Default: Fan Speed 3	**533**	unit16	0..12 (x1)		R/W
TR/RL ON Value	The value at the Relay (or triac) Output Switches ON Note: Used also for triac outputs.	**575**	unit16	0..100 (x1)	0..100% (Default 50%)	
TR/RL OFF Value	The value at the Relay (or triac) Output Switches OFF Note: Used also for triac outputs.	**576**	unit16	0..100 (x1)	0..100% (Default 0%)	R/W
RL1 Override	RL1 Control Source Override Value (xCR13 only). Note: Only applicable when source is set to Network.	**535**	unit16	0..1000 (x10)	0.0..100.0% (Default 0)	R/W
RL2 Override	RL2 Control Source Override Value (xCR13 only). Note: Only applicable when source is set to Network.	**536**	unit16	0..1000 (x10)	0.0..100.0% (Default 0)	R/W
RL3 Override	RL3 Control Source Override Value (xCR13 only). Note: Only applicable when source is set to Network.	**537**	unit16	0..1000 (x10)	0.0..100.0% (Default 0)	R/W

OUTPUT AUTO EXERCISE						
Exercise Interval	Sets the period of inactivity to activate the corresponding output.	**500**	uint16	0..255 (x1)	0..255 days (Default 0 days)	R/W
Y1 Duration	Analogue Output 1 Exercise Time. After configured period of inactivity, the output is driven to 50% for the Y1 Duration Time	**501**	uint16	0..255 (x1)	0..255 Minutes (Default: 0) 0 = Disabled	R/W
Y2 Duration	Analogue Output 2 Exercise Time. After configured period of inactivity, the output is driven to 50% for the Y2 Duration Time	**502**	uint16	0..255 (x1)	0..255 Minutes (Default: 0) 0 = Disabled	R/W
Y3 Duration	Analogue Output 3 Exercise Time. After configured period of inactivity, the output is driven to 50% for the Y3 Duration Time	**503**	uint16	0..255 (x1)	0..255 Minutes (Default: 0) 0 = Disabled	R/W
Y4 Duration	Analogue Output 4 Exercise Time. After configured period of inactivity, the output is driven to 50% for the Y4 Duration Time	**504**	uint16	0..255 (x1)	0..255 Minutes (Default: 0) 0 = Disabled	R/W
TR1 Duration	Triac Output 1 Exercise Time. After configured period of inactivity, the output is driven to opposite state for the TR1 Duration Time	**505**	uint16	0..255 (x1)	0..255 Minutes (Default: 0) 0 = Disabled	R/W
TR2 Duration	Triac Output 2 Exercise Time. After configured period of inactivity, the output is driven to opposite state for the TR2 Duration Time	**506**	uint16	0..255 (x1)	0..255 Minutes (Default: 0) 0 = Disabled	R/W
TR3 Duration	Triac Output 3 Exercise Time. After configured period of inactivity, the output is driven to opposite state for the TR3 Duration Time	**507**	uint16	0..255 (x1)	0..255 Minutes (Default: 0) 0 = Disabled	R/W
TR4 Duration	Triac Output 4 Exercise Time. After configured period of inactivity, the output is driven to opposite state for the TR4 Duration Time	**508**	uint16	0..255 (x1)	0..255 Minutes (Default: 0) 0 = Disabled	R/W

Parameter	Description	Modbus Register	MODBUS HOLDING REGISTER - FUNCTION CODES 03, 06, 16			
			Type	Data Range (multiplier)	Value Range / Enumerations	R/W
COMMISSIONING OVERRIDES (Modbus Versions Only)						
Y1 Commission Override	Y1 Commissioning Override Parameter	**690**	uint16	0..3 (x1)	0 = Auto (Default) 1 = Manual Override 2 = 0% 3 = 100%	R/W
Y2 Commission Override	Y2 Commissioning Override Parameter	**691**	uint16	0..3 (x1)		R/W
Y3 Commission Override	Y3 Commissioning Override Parameter	**692**	uint16	0..3 (x1)		R/W
Y4 Commission Override	Y4 Commissioning Override Parameter	**693**	uint16	0..3 (x1)		R/W
Y1 Override	Analogue Output Y1 Override Value (used when 690 = Manual)	**534**	unit16	0..1000 (x10)	0.0..100.0% (Default 0)	R/W
Y2 Override	Analogue Output Y2 Override Value (used when 691 = Manual)	**535**	unit16	0..1000 (x10)	0.0..100.0% (Default 0)	R/W
Y3 Override	Analogue Output Y3 Override Value (used when 692 = Manual)	**536**	unit16	0..1000 (x10)	0.0..100.0% (Default 0)	R/W
Y4 Override	Analogue Output Y4 Override Value (used when 693 = Manual)	**537**	unit16	0..1000 (x10)	0.0..100.0% (Default 0)	R/W
TR1 Override	TR1 Commissioning Override Parameter (xCR11/xCR12/xCR13)	**694**	uint16	0..3 (x1)	0 = Auto (Default) 1 = Manual Override 2 = 0% 3 = 100%	R/W
TR2 Override	TR2 Commissioning Override Parameter (xCR11/xCR12/xCR13)	**695**	uint16	0..3 (x1)		R/W
TR3 Override	TR3 Commissioning Override Parameter (xCR11 only)	**696**	uint16	0..3 (x1)		R/W
TR4 Override	TR4 Commissioning Override Parameter (xCR11 only)	**697**	uint16	0..3 (x1)		R/W
RL1 Commission Override	Relay 1 Commissioning Override Parameter (xCR13 only)	**691**	uint16	0..3 (x1)	0 = Auto (Default) 1 = not applicable 2 = 0% 3 = 100%	R/W
RL2 Commission Override	Relay 2 Commissioning Override Parameter (xCR13 only)	**692**	uint16	0..3 (x1)		
RL3 Commission Override	Relay 3 Commissioning Override Parameter (xCR13 only)	**693**	uint16	0..3 (x1)		
Triac 1 Level Override	Triac 1 Output (PWM) Network Override (xCR11/xCR12/xCR13) Note: When 694 = Manual	**583**	uint16	0..100 (x1)	0% = OFF (default) 100% = ON 1%.99% = ON/OFF based on Pulse Width Modulation Settings	R/W
Triac 2 Level Override	Triac 2 Output (PWM) Network Override (xCR11/xCR12/xCR13) Note: When 695 = Manual	**584**	uint16	0..100 (x1)		R/W
Triac 3 Level Override	Triac 3 Output (PWM) Network Override (xCR11 Range Only) Note: When 696 = Manual	**585**	uint16	0..100 (x1)		
Triac 4 Level Override	Triac 4 Output (PWM) Network Override (xCR11 Range Only) Note: When 697 = Manual	**586**	uint16	0..100 (x1)		

AVERAGE FUNCTION						
Parameter	**Description**	**Modbus Register / BACnet Property**	**MODBUS HOLDING REGISTER - FUNCTION CODES 03, 06, 16**			
			Type	**Data Range (multiplier)**	**Value Range / Enumerations**	**R/W**
Measurement 1	Measurement 1 for Average Calculation	**755**	uint16	0..3 (x1)	0 = Disabled (Default) 1 = UI1 2 = UI2 3 = Internal Temperature	R/W
Measurement 2	Measurement 2 for Average Calculation	**756**	uint16	0..3 (x1)		R/W
Measurement 3	Measurement 3 for Average Calculation	**757**	uint16	0..3 (x1)		R/W
Measurement 4	Measurement 4 for Average Calculation NOTE: Options 1-4 use Register 460-463 values allowing averaging to be done both NTC10 and voltage	**758**	uint16	0..3 (x1)		R/W

CALIBRATION AND VOC MODE SETTINGS						
		Modbus Register / BACnet Property	MODBUS HOLDING REGISTER - FUNCTION CODES 03, 06, 16			
Parameter	**Description**		**Type**	**Data Range (multiplier)**	**Value Range / Enumerations**	**R/W**
Temperature Offset	Built-In Temperature Single Point Sensor Calibration Offset	**590**	int16	-100..100 (x10)	-10.0..+10.0deg (Default 0)	R/W
Humidity Offset	Humidity Single Point Calibration Offset	**591**	int16	-100..100 (x10)	-10.0..+10.0%rH (Default 0)	R/W
CO2 Offset	CO2 Single Point Calibration Offset (adjusts CO2 reading the specified amount)	**592**	int16	-500..500 (x1)	-500..+500ppm (Default 0)	R/W
CO2 Auto-Calibration	Shows if the auto-calibration of the CO2 has been Activated	**593**	uint16	0..1	0 = Disabled 1 = Enabled (Default)	R/W
CO2 Calibration Value	Single Point Calibration Value for the CO2 Sensor. Note: Writing this value will reset the calibration settings of the sensor to the value set. Only recommended for advanced users.	**594**	uint16	350..3,000 (x1)	350..3,000ppm (Default 400)	R/W
CO2 Low Power	Enabling CO2 Measurement Low Power Mode	**935**	uint16	0..1	0 = Disabled (Default) 1 = Enabled	R/W
Force CO2 Calibration	Forces CO2 Calibration to the CO2 Calibration Value. Use when CO2 level known e.g with calibration gas or outside air.	**595**	uint16	0..1	0 = None 1 = Force Calibration	R/W
CO2 Calibration Persist	Store CO2 Calibration Settings in the Permanent Memory	**596**	uint16	0..1	0 = None 1 = Save Data	R/W
VOC Measurement Mode	VOC Measurement Mode Selection (Index, Well Standard, Reset Air Standard)	**529**	uint16	0..2	0 = VOC Index 1 = TVOC Molhave, ug/m3 (Well) 2 = TVOC Isobutylene, ug/m3 (Reset)	R/W
VOC Learning Time Offset	VOC Learning Time Offset. Set to 12 for Index mode and 720 for Building Standards Mode	**598**	uint16	1..1,000 (x1)	1..1,000hours (Default 12)	R/W
VOC Low Power	Enabling VOC/TVOC Measurement Low Power Mode	**936**	uint16	0..1	0 = Disabled (Default) 1 = Enabled	R/W

TOUCHSCREEN AND GENERAL SETTINGS						
		Modbus Register / BACnet Property	MODBUS HOLDING REGISTER - FUNCTION CODES 03, 06, 16			
Parameter	**Description**		**Type**	**Data Range (multiplier)**	**Value Range / Enumerations**	**R/W**
GENERAL						
Display Colour	Sets the display colour (display skin).	**600**	uint16	0..4	0 = White 1 = Green 2 = Blue 3 = Grey (default) 4 = Black	R/W
Display Brightness	Controls display brightness. By setting to Off, the display switches off after the timeout. Display wakes up when it is touched.	**601**	uint16	0..6	0 = Off 1 = 5% 2 = 10% 3 = 25% 4 = 50% (default) 5 = 75% 6 = 100%	R/W
Mode Icon Display	Activates Mode Icon display on the top status bar (Occupied / Unoccupied / Off).	**602**	uint16	0..1	0 = Disabled (default) 1 = Enabled	R/W
Heat/Cool Icon	Activates Heat/Cool icon on the top status bar.	**603**	uint16	0..1	0 = Disabled (default) 1 = Enabled	R/W
Enable Fan Display	Enables Fan Speed Display and/or Fan Speed Button.	**604**	uint16	0..3	0 = Disabled (default) 1 = Icon Only 2 = Touch	R/W
Enable Mode Button	Enables the Mode Button on the action bar.	**605**	uint16	0..3	0 = Disabled 1 = Occupied / Unoccupied 2 = Occupied / Unocc/ Off (default) 3 = Occupied / Off	R/W

Enable Boost Button	Enables Boost Button on the bottom action bar	**606**	uint16	0..1	0 = Disabled (default) 1 = Enabled	R/W
Lock Code	Screen Lock Code - 0000 = User requires no code to lock the screen	**607**	unit16	0..9,999 (x1)	0..9,999 (Default 0000)	R/W
Auto Lock	Enables Auto Lock of the Screen (approx 3 minutes after unlocking the screen)	**612**	uint16	0..1	0 = Disabled (default) 1 = Enabled	R/W
Screen Lock Override	Overrides the Current State of the Screen Lock Note: If Override is on (i.e. set to 1 or 2), it is not possible to change the lock status from the screen.	**608**	unit16	0..2 (x1)	0 = No Override 1 = Unlock Screen 2 = Lock Screen	R/W
Config Code	Code to Enter Configuration Screen, Set to 0000 to bypass the requirement to enter the code.	**609**	unit16	0..9,999 (x1)	0..9,999 (Default 8000)	R/W
Alternate Fan Adjust	Alternative Fan Speed Adjustment setting. Uses the temperature setpoint adjustment location with +/- buttons	**610**	unit16	0..1 (x1)	0 = Disabled 1 = Enabled	R/W
Setpoint Slider Screen	When enabled shows the Setpoint Slider Screen when adjusting setpoint. Disabled shows setpoint on the main screen.	**611**	unit16	0..1 (x1)	0 = Disabled 1 = Enabled (Default)	R/W

DISPLAY LOCATION 1 (PRIMARY DISPLAY LOCATION)						
Location 1 Display	Location 1 Display Source. Sets what is displayed in Location 1. Options 15 & 16 show the user setpoint adjustment instead of the calculated setpoint (from Fw 1.56)	**620**	uint16	0..18	0 = None 1 = Network Decimal Value 2 = Network Integer Value 3 = Temperature 4 = Universal Input 1 5 = Universal Input 2 6 = Humidity 7 = CO2 8 = VOC Index 9 = Main Loop Setpoint (default) 10 = Aux Loop Setpoint 11 = Humidity Setpoint 12 = Heating Demand 13 = Cooling Demand 14 = Fan Demand 15 = Main Loop SPA 16 = Aux Loop SPA 17 = Average Temp 18 = Boost Timer	R/W
Location 1 Description	Location 1 Description. Sets description for Location 1.	**621**	uint16	0..28	0 = None 1 = Temperature 2 = Humidity 3 = CO2 4 = VOC 5 = Light Level 6 = Pressure 7 = Room 8 = Outside 9 = Fan 10 = Energy 11 = Water 12 = Electricity 13 = Heating 14 = Cooling 15 = Zone 1 16 = Zone 2 17 = Temp. Set (Default) 18 = Hum. Set 19 = CO2 Set 20 = Aux. Set 21 = Room Set 22 = Zone 1 Set 23 = Zone 2 Set 24 = Windows 25 = Blinds 26 = TVOC 27 = Flow 28 = Boost	R/W

Location 1 Unit	Location 1 Unit. Sets unit for Location 1.	**622**	uint16	0..15	0 = None 1 = °C (Default) 2 = °F 3 = ppm 4 = Lux 5 = Pa 6 = kWh 7 = m3 8 = % 9 = index (air quality index 10 = l/s 11 = m3/h 12 = cfm 13 = ppb 14 = ug/m3 15 = Mins	R/W
Location 1 Alarm	Activates Location 1 Alarm Bar or Descriptive Text indication. Using 1=Bar activates Green, Amber, Red alarm icon indication underneath the current displayed parameter. Using 1=Text activates LOW, NORMAL, HIGH text indication instead of the measurement.	**623**	uint16	0..3	0 = Disabled (default) 1 = Bar 2 = Text 3 = Skin Colour	R/W
Location 1 Red Alarm Limit	Red Limit for Alarm 1 / High Limit for Descriptive Display	**624**	uint16	0..10,000 (x1)	0..10,000 (default 1250)	R/W
Location 1 Amber Alarm Limit	Amber Limit for Alarm 1 / Medium Limit for Descriptive Displays	**625**	uint16	0..10,000 (x1)	0..10,000 (default 750)	R/W
Location 1 Hysteresis	Hysteresis for Alarm 1 / Low Limit for Descriptive Displays	**626**	uint16	0..10,000 (x1)	0..10,000 (default 100)	R/W
Location 1 Read Only	Sets the location 1 to be Read Only, Read/Write or Read-Write-NoLock. In Read Only mode touch functions are disabled for this location. In Read-Write-NoLock mode the touch actions are enabled even if the screen is locked.	**655**	uint16	0..2	0 = Read-Write (default) 1 = Read Only 2 = Read-Write-NoLock	R/W
DISPLAY LOCATION 2						
Location 2 Display	Location 2 Display Source. Sets what is displayed in Location 2. Options 15 & 16 show the user setpoint adjustment instead of the calculated setpoint (from Fw 1.56) Options 19 & 20 activate Clean My Room (CMR) and Do Not Disturb (DND) Buttons	**627**	uint16	0..20	0 = None 1 = Network Decimal Value 2 = Network Integer Value 3 = Temperature (default) 4 = Universal Input 1 5 = Universal Input 2 6 = Humidity 7 = CO2 8 = VOC Index 9 = Main Loop Setpoint 10 = Aux Loop Setpoint 11 = Humidity Setpoint 12 = Heating Demand 13 = Cooling Demand 14 = Fan Demand 15 = Main Loop SPA 16 = Aux Loop SPA 17 = Average Temp 18 = Boost Timer 19 = Clean My Room 20 = Do Not Disturb	R/W

Location 2 Description	Location 2 Description	**628**	uint16	0..28	0 = None 1 = Temperature (Default) 2 = Humidity 3 = CO2 4 = VOC 5 = Light Level 6 = Pressure 7 = Room 8 = Outside 9 = Fan 10 = Energy 11 = Water 12 = Electricity 13 = Heating 14 = Cooling 15 = Zone 1 16 = Zone 2 17 = Temp. Set 18 = Hum. Set 19 = CO2 Set 20 = Aux. Set 21 = Room Set 22 = Zone 1 Set 23 = Zone 2 Set 24 = Windows 25 = Blinds 26 = TVOC 27 = Flow 28 = Boost	R/W
Location 2 Unit	Location 2 Unit	**629**	uint16	0..15	0 = None 1 = °C (default) 2 = °F 3 = ppm 4 = Lux 5 = Pa 6 = kWh 7 = m3 8 = % 9 = index (air quality index) 10 = l/s 11 = m3/h 12 = cfm 13 = ppb 14 = ug/m3 15 = Mins	R/W
Location 2 Alarm	Activates Location 2 Alarm Bar or Descriptive Text indication. Using 1=Bar activates Green, Amber, Red alarm icon indication underneath the current displayed parameter. Using 2=Text activates LOW, NORMAL, HIGH text indication instead of the measurement.	**630**	uint16	0..3	0 = Disabled 1 = Bar (default) 2 = Text 3 = Skin Colour	R/W
Location 2 Red Alarm Limit	Red Limit for Alarm 2 / High Limit for Descriptive Display	**631**	uint16	0..10,000 (x1)	0..10,000 (default 30)	R/W
Location 2 Amber Alarm Limit	Amber Limit for Alarm 2 / Medium Limit for Descriptive Displays	**632**	uint16	0..10,000 (x1)	0..10,000 (default 25)	R/W
Location 2 Hysteresis	Hysteresis for Alarm 2 / Low Limit for Descriptive Displays	**633**	uint16	0..10,000 (x1)	0..10,000 (default 1)	R/W
Location 2 Read Only	Sets the location 2 to be Read Only, Read/Write or Read-Write-NoLock. In Read Only mode touch functions are disabled for this location. In Read-Write-NoLock mode the touch actions are enabled even if the screen is locked.	**656**	uint16	0..2	0 = Read-Write (default) 1 = Read Only 2 = Read-Write-NoLock	R/W

DISPLAY LOCATION 3						
Location 3 Display	Location 3 Display Source. Sets what is displayed in Location 3. Options 15 & 16 show the user setpoint adjustment instead of the calculated setpoint (from Fw1.56) Options 19 & 20 activate Clean My Room (CMR) and Do Not Disturb (DND) Buttons	**634**	uint16	0..20	0 = None 1 = Network Decimal Value 2 = Network Integer Value 3 = Temperature 4 = Universal Input 1 5 = Universal Input 2 6 = Humidity 7 = CO2 (default) 8 = VOC Index 9 = Main Loop Setpoint 10 = Aux Loop Setpoint 11 = Humidity Setpoint 12 = Heating Demand 13 = Cooling Demand 14 = Fan Demand 15 = Main Loop SPA 16 = Aux Loop SPA 17 = Average Temp 18 = Boost Timer 19 = Clean My Room 20 = Do Not Disturb	R/W
Location 3 Description	Location 3 Description	**635**	uint16	0..28	0 = None 1 = Temperature 2 = Humidity 3 = CO2 (Default) 4 = VOC 5 = Light Level 6 = Pressure 7 = Room 8 = Outside 9 = Fan 10 = Energy 11 = Water 12 = Electricity 13 = Heating 14 = Cooling 15 = Zone 1 16 = Zone 2 17 = Temp. Set 18 = Hum. Set 19 = CO2 Set 20 = Aux. Set 21 = Room Set 22 = Zone 1 Set 23 = Zone 2 Set 24 = Windows 25 = Blinds 26 = TVOC 27 = Flow 28 = Boost	R/W
Location 3 Unit	Location 3 Unit	**636**	uint16	0..15	0 = None 1 = °C 2 = °F 3 = ppm (default) 4 = Lux 5 = Pa 6 = kWh 7 = m3 8 = % 9 = index (air quality index) 10 = l/s 11 = m3/h 12 = cfm 13 = ppb 14 = ug/m3 15 = Mins	R/W
Location 3 Alarm	Activates Location 3 Alarm Bar or Descriptive Text indication. Using 1=Bar activates Green, Amber, Red alarm icon indication underneath the current displayed parameter. Using 2=Text activates LOW, NORMAL, HIGH text indication instead of the measurement.	**637**	uint16	0..3	0 = Disabled 1 = Bar (default) 2 = Text 3 = Skin Colour	R/W
Location 3 Red Alarm Limit	Red Limit for Alarm 3 / High Limit for Descriptive Display	**638**	uint16	0..10,000 (x1)	0..10,000 (default 1250)	R/W

Location 3 Amber Alarm Limit	Amber Limit for Alarm 3 / Medium Limit for Descriptive Displays	**639**	uint16	0..10,000 (x1)	0..10,000 (default 750)	R/W
Location 3 Hysteresis	Hysteresis for Alarm 3 / Low Limit for Descriptive Displays	**640**	uint16	0..10,000 (x1)	0..10,000 (default 100)	R/W
Location 3 Read Only	Sets the location 3 to be Read Only, Read/Write or Read-Write-NoLock. In Read Only mode touch functions are disabled for this location. In Read-Write-NoLock mode the touch actions are enabled even if the screen is locked.	**657**	uint16	0..2	0 = Read-Write (default) 1 = Read Only 2 = Read-Write-NoLock	R/W

DISPLAY LOCATION 4						
Location 4 Display	Location 4 Display Source. Sets what is displayed in Location 4. Options 15 & 16 show the user setpoint adjustment instead of the calculated setpoint (from Fw 1.56) Options 19 & 20 activate Clean My Room (CMR) and Do Not Disturb (DND) Buttons	**641**	uint16	0..20	0 = None 1 = Network Decimal Value 2 = Network Integer Value 3 = Temperature (default) 4 = Universal Input 1 5 = Universal Input 2 6 = Humidity 7 = CO2 8 = VOC Index 9 = Main Loop Setpoint 10 = Aux Loop Setpoint 11 = Humidity Setpoint 12 = Heating Demand 13 = Cooling Demand 14 = Fan Demand 15 = Main Loop SPA 16 = Aux Loop SPA 17 = Average Temp 18 = Boost Timer 19 = Clean My Room 20 = Do Not Disturb	R/W
Location 4 Description	Location 4 Description	**642**	uint16	0..28	0 = None 1 = Temperature 2 = Humidity (Default) 3 = CO2 4 = VOC 5 = Light Level 6 = Pressure 7 = Room 8 = Outside 9 = Fan 10 = Energy 11 = Water 12 = Electricity 13 = Heating 14 = Cooling 15 = Zone 1 16 = Zone 2 17 = Temp. Set 18 = Hum. Set 19 = CO2 Set 20 = Aux. Set 21 = Room Set 22 = Zone 1 Set 23 = Zone 2 Set 24 = Windows 25 = Blinds 26 = TVOC 27 = Flow 28 = Boost	R/W

Location 4 Unit	Location 4 Unit	**643**	uint16	0..15	0 = None 1 = °C 2 = °F 3 = ppm 4 = Lux 5 = Pa 6 = kWh 7 = m3 8 = % (default) 9 = index 10 = l/s 11 = m3/h 12 = cfm 13 = ppb 14 = ug/m3 15 = Mins	R/W
Location 4 Alarm	Activates Location 4 Alarm Bar or Descriptive Text indication. Using 1=Bar activates Green, Amber, Red alarm icon indication underneath the current displayed parameter. Using 2=Text activates LOW, NORMAL, HIGH text indication instead of the measurement.	**644**	uint16	0..3	0 = Disabled 1 = Bar (default) 2 = Text 3 = Skin Colour	R/W
Location 4 Red Alarm Limit	Red Limit for Alarm 4 / High Limit for Descriptive Display	**645**	uint16	0..10,000 (x1)	0..10,000 (default 80)	R/W
Location 4 Amber Alarm Limit	Amber Limit for Alarm 4 / Medium Limit for Descriptive Displays	**646**	uint16	0..10,000 (x1)	0..10,000 (default 60)	R/W
Location 4 Hysteresis	Hysteresis for Alarm 4 / Low Limit for Descriptive Displays	**647**	uint16	0..10,000 (x1)	0..10,000 (default 10)	R/W
Location 4 Read Only	Sets the location 4 to be Read Only, Read/Write or Read-Write-NoLock. In Read Only mode touch functions are disabled for this location. In Read-Write-NoLock mode the touch actions are enabled even if the screen is locked.	**658**	uint16	0..2	0 = Read-Write (default) 1 = Read Only 2 = Read-Write-NoLock	R/W

DISPLAY LOCATION 5						
		Modbus Register / BACnet Property	**MODBUS HOLDING REGISTER - FUNCTION CODES 03, 06, 16**			
Location 5 Display	Location 5 Display Source. Sets what is displayed in Location 5.	**648**	uint16	0..20	0 = None (default) 1 = Network Decimal Value 2 = Network Integer Value 3 = Temperature 4 = Universal Input 1 5 = Universal Input 2 6 = Humidity 7 = CO2 8 = VOC Index 9 = Main Loop Setpoint 10 = Aux Loop Setpoint 11 = Humidity Setpoint 12 = Heating Demand 13 = Cooling Demand 14 = Fan Demand 15 = Main Loop SPA 16 = Aux Loop SPA 17 = Average Temp 18 = Boost Timer 19 = Clean My Room 20 = Do Not Disturb	R/W

Location 5 Description	Location 5 Description Options 19 & 20 activate Clean My Room (CMR) and Do Not Disturb (DND) Buttons	**649**	uint16	0..28	0 = None (default) 1 = Temperature 2 = Humidity 3 = CO2 4 = VOC 5 = Light Level 6 = Pressure 7 = Room 8 = Outside 9 = Fan 10 = Energy 11 = Water 12 = Electricity 13 = Heating 14 = Cooling 15 = Zone 1 16 = Zone 2 17 = Temp. Set 18 = Hum. Set 19 = CO2 Set 20 = Aux. Set 21 = Room Set 22 = Zone 1 Set 23 = Zone 2 Set 24 = Windows 25 = Blinds 26 = TVOC 27 = Flow 28 = Boost	R/W
Location 5 Unit	Location 5 Unit	**650**	uint16	0..15	0 = None (default) 1 = °C 2 = °F 3 = ppm 4 = Lux 5 = Pa 6 = kWh 7 = m3 8 = % 9 = index 10 = l/s 11 = m3/h 12 = cfm 13 = ppb 14 = ug/m3 15 = Mins	R/W
Location 5 Alarm	Activates Location 5 Alarm Bar, Alarm Skin Colour or Descriptive Text indication. Using 1=Bar activates Green, Amber, Red alarm icon indication underneath the current displayed parameter. Using 3=Text activates LOW, MEDIUM HIGH text indication instead of the measurement. Using 3= Skin activates the skin colour changing based on alarm condition.	**651**	uint16	0..3	0 = Disabled (default) 1 = Bar 2 = Text 3 = Skin	R/W
Location 5 Red Alarm Limit	Red Limit for Alarm 5 / High Limit for Descriptive Display	**652**	uint16	0..10,000 (x1)	0..10,000 (default 140)	R/W
Location 5 Amber Alarm Limit	Amber Limit for Alarm 5 / Medium Limit for Descriptive Displays	**653**	uint16	0..10,000 (x1)	0..10,000 (default 120)	R/W
Location 5 Hysteresis	Hysteresis for Alarm 5 / Low Limit for Descriptive Displays	**654**	uint16	0..10,000 (x1)	0..10,000 (default 10)	R/W
Location 5 Read Only	Sets the location 5 to be Read Only, Read/Write or Read-Write-NoLock. In Read Only mode touch functions are disabled for this location. In Read-Write-NoLock mode the touch actions are enabled even if the screen is locked.	**659**	uint16	0..2	0 = Read-Write (default) 1 = Read Only 2 = Read-Write-NoLock	R/W

CONTROL SETTINGS						
		Modbus Register / BACnet Property	**MODBUS HOLDING REGISTER - FUNCTION CODES 03, 06, 16**			
Parameter	**Description**		**Type**	**Data Range (multiplier)**	**Value Range / Enumerations**	**R/W**
CONTROL MODES AND OVERRIDES						
PIR Op. Mode Control	Built-in PIR influence on the operation mode. If set to Off, the built-in PIR only shows the status on the network and has no impact on the operating mode.	**679**	uint16	0..1	0 = On (Default) 1 = Off	R/W
Inactive PIR Control Mode	Controller Mode when the PIR (OE-option) does not detect movement. If Option 0 = Unoccupied is selected, and the controller is in the OFF operating mode the PIR is disabled - no impact.	**680**	uint16	0..1	0 = Unoccupied Mode (Default) 1 = Off Mode	R/W
Override Control Mode	Override Current Control Mode (last transition applies e.g. if overridden from network the user can change through the display) From V1.54 onwards will return automatically to 3 after override.	**681**	uint16	0..3 (x1)	0 = Occupied 1 = Unoccupied 2 = Night 3 = No Override	R/W
Boost Time	Boost Step Time	**682**	uint16	0..28,800 (x1)	0..28,800 seconds 0 = Timer disabled, toggle functionality (default)	R/W
Boost Steps	Number of Boost Steps. The boost time is extended by every press of the button up to number of Boost Steps (Fw 1.76).	**670**	uint16	1..5 (x1)	1..5 steps (Default: 1)	R/W
Boost Target	Sets the boost operation target. With options 1..11 the output is boosted to 100% for the Boost Time (Param 682). With option 12 - Occupancy - the controller mode is changed to the 'Occupied' mode for the Boost Time.	**683**	uint16	0..12 (x1)	0 = None 1 = Heating Stage 1 2 = Heating Stage 2 3 = Heating Stage 3 4 = Cooling Stage 1 5 = Cooling Stage 2 6 = Cooling Stage 3 7 = Auxiliary Demand 8 = CO2 Demand 9 = VOC Demand 10 = Humidity Demand 11 = Fan Demand 12 = Occupancy	R/W
Reset User Adjustment	Resets the user setpoint adjustments (multi-stage, aux and humidity loops and fan speed back to auto) when operating mode transitions away from the Occupied mode.	**684**	uint16	0..1	0 = Off (Default) 1 = On	R/W
Store User Adjustment	Stores the user setpoint adjustment in non-volatile memory (when adjusted through screen)	**689**	uint16	0..1	0 = Disabled (Default) 1 = Enabled	R/W
MULTI-STAGE CONTROL LOOP						
Main Loop Source	Sets the Control Source for the Multi-Stage Control Loop. Note: If UI mode is NTC, the control value is as measured. If the UI mode is 0-10V, then 0..10V is scaled to measurement according to UI Input Min/Max scaling parameters 523-526. Option 6 - Average is the output of averaging function (Fw1.54 onwards)	**700**	uint16	0..6 (x1)	0 = Network Value (Reg 538) 1 = Temperature (Built-In, Default) 2 = UI1 - NTC10 3 = UI2 - NTC10 4 = UI1 - 0..10Vdc 5 = UI2 - 0..10Vdc 6 = Average	R/W
Multi-Stage Nominal Setpoint	Multi-Stage Control Loop Nominal Setpoint (SPnom) Note: The control loop setpoint can be shifted by the high/low limit (cascade) control function indicated by limit icon.	**701**	uint16	0..2120 (x10)	0.0..212.0, Default 21.0	R/W
Main Setpoint Resolution	Main Setpoint Adjustment Resolution	**702**	uint16	1..100 (x10)	0.1..10.0 (default 0.1)	R/W
Min Adjustment	User Setpoint Adjustment Min Limit	**703**	int16	-300..0 (x10)	-30.0..0.0 (Default -3.0)	R/W
Max Adjustment	User Setpoint Adjustment Max Limit	**704**	unit16	0..300 (x10)	0..0..30.0 (Default 3.0)	R/W
Main Loop PB	Main Control Loop Proportional Band (for each Stage	**705**	uint16	1..500 (x1)	1..500 (Default 5)	R/W
Main IA	Main Control Loop Integral Action Time (Set to 0 to disable)	**706**	uint16	0..3600 (x1)	0..3600s (Default 600s) 0 = Disabled	R/W
No of Heating Stages	Sets the number of heating stages.	**707**	uint16	0..3 (x1)	0 = None 1 = 1-Stage (default) 2 = 2-Stages 3 = 3-Stages	R/W
No of Cooling Stages	Sets the number of cooling stages.	**708**	uint16	0..3 (x1)		R/W

Occ Heating Deadzone	Occupied Mode Heating Deadzone	**709**	unit16	0..300 (x10)	0.0..30.0 (Default 0.5)	R/W
Occ Cooling Deadzone	Occupied Mode Cooling Deadzone	**710**	uint16	0..300 (x10)	0.0..30.0 (Default 0.5)	R/W
Unocc Heating Deadzone	Unoccupied Mode Heating Deadzone	**711**	uint16	0..300 (x10)	0.0..30.0 (Default 3.0)	R/W
Unocc Cooling Deadzone	Unoccupied Mode Cooling Deadzone	**712**	uint16	0..300 (x10)	0.0..30.0 (Default 3.0)	R/W
Frost Setpoint	Off Mode Frost Setpoint	**713**	uint16	0..600 (x10)	0.0..60.0 (Default 10.0)	R/W
User Setpoint Adjustment	Current User Setpoint Adjustment (Run time memory)	**790**	int16	-300..0..300.0 (x10)	Param 703 to Param 704	R/W
DZ Mode	Deadzone Mode. In standard mode the Integral Action modulates to zero within the deadzone providing energy savings. In Hold mode the integral action element is held within the deadzone.	**793**	uint16	0..1 (x1)	0 = Standard (Default) 1 = Hold	R/W

AUXILIARY CONTROL LOOP						
Auxiliary Source	Sets the Source for the Auxiliary Control. Note: If UI mode is NTC, the control value is as measured. If the UI mode is 0-10V, then 0..10V is scaled to measurement according to UI Input Min/Max scaling parameters 523-526. Option 6 - Average is the output of averaging function (Fw1.54 onwards)	**714**	uint16	0..6 (x1)	0 = Network Value (Reg 538) 1 = Temperature (Built-In, Default) 2 = UI1 - NTC10 3 = UI2 - NTC10 4 = UI1 - 0..10Vdc 5 = UI2 - 0..10Vdc 6 = Average	R/W
Aux Setpoint	Auxiliary Control Loop Setpoint	**715**	uint16	0..9999 (x10)	0.0..999.9 (Default 21.0)	R/W
Aux Setpoint Resolution	Aux Setpoint Adjustment Resolution	**716**	uint16	1..100 (x10)	x10: 0.1..10.0 (default 0.1)	R/W
Min Adjustment	User Setpoint Adjustment Min Limit	**717**	int16	-9999..0 (x10)	-999.9..0.0 (Default -99.9)	R/W
Max Adjustment	User Setpoint Adjustment Max Limit	**718**	unit16	0..9999 (x10)	0.0..999.9 (Default 3.0)	R/W
Aux PB	Auxiliary Control Proportional Band	**719**	uint16	1..9999 (x1)	1..9999(Default 5)	R/W
Aux IA	Auxiliary Control Integral Action Time (Set to 0 to disable)	**720**	uint16	0..3600 (x1)	0..3600s (Default 300s) 0 = Disabled	R/W
Aux Mode	Auxiliary Loop Control Mode Note: Change-Over mode can override the mode.	**721**	uint16	0..1 (x1)	0 = Reverse (Heating) - Default 1 = Direct (Cooling)	R/W
User Setpoint Adjustment	Current User Setpoint Adjustment for Aux Loop (Run time memory)	**791**	int16	-300..0..300.0 (x10)	Param 717 to Param 718	R/W
CHANGE-OVER FUNCTION						
Change-Over Source	Sets the Source for the Change-Over Function. Note: As default the Network Command is Off i.e. no change-over function is active.	**722**	uint16	0..4 (x1)	0 = Network Command (Reg 726, Default) 1= UI1 - NTC10 2 = UI2 - NTC10 3 = Digital Input 1 (UI1) 4 = Digital Input 2 (UI2)	R/W
Change-Over Target	Target of the Change-Over Control.	**723**	uint16	0..3 (x1)	0 = None (Default) 1 = Multi-Stage Control Loop 2 = Auxiliary Control Loop 3 = Multi-Stage and Aux Loops	R/W
Change-Over Low Temperature	Temperature below which the change-over is active (cooling stage active). Note: Relevant only for NTC Input 1/2 options.	**724**	uint16	0..1000 (x10)	0..100.0° Default 18°	R/W
Change-Over High Temperature	Temperature above which the change-over is off (heating stage active, no override on control). Note: Relevant only for NTC Input 1/2 options.	**725**	uint16	0..1000 (x10)	0..100.0° Default 22°	R/W
Network Change-Over Override	Heating / Cooling Mode Command from Network. Note: Requires change-over source to be set as Network.	**726**	uint16	0..1 (x1)	0 = Heating (Default) 1 = Cooling	R/W

LOW/HIGH LIMIT RESET FUNCTION						
Reset Control Source	Sets the Temperature Souce for the Reset Control Function. Note: Default: 0 - Network.	**727**	uint16	0..2 (x1)	0 = Network (Reg 538) 1= UI1 - NTC10 2 = UI2 - NTC10	R/W
Reset Control Target	Target of the Reset Control Logic. The reset logic resets the target control loop setpoint as per calculated by the logic.	**728**	uint16	0..2 (x1)	0 = None (Default) 1 = Multi-Stage Control Loop 2 = Auxiliary Control Loop	R/W
High Limit Setpoint	High Limit Setpoint. Above this limit the setpoint is reduced proportionally according to the ratio and temperature difference.	**729**	uint16	0..1000 (x10)	0.0..100.0° Default 35°	R/W
Low Limit Setpoint	Low Limit Setpoint. Below this limit the setpoint is increased proportionally according to the ratio and temperature difference.	**730**	uint16	0..1000 (x10)	0.0..100.0° Default 15°	R/W
Reset Ratio	Reset ratio used to calculated the setpoint reset.	**731**	uint16	0..100 (x10)	0.0..10.0 (Default 1.0)	R/W

MAX FUNCTION / PRIORITY LEVEL						
Max1 Source 1	Sets the Source for Input 1 of Maximum Function 1 Default: Heating Stage 1	**732**	uint16	0..13 (x1)	0 = Network Value (Reg 538) 1 = Heating Stage 1 2 = Heating Stage 2 3 = Heating Stage 3 4 = Cooling Stage 1 5 = Cooling Stage 2 6 = Cooling Stage 3 7 = Auxiliary Demand 8 = CO2 Demand 9 = VOC Demand 10 = Humidity Demand 11 = Max Function 1 12 = Max Function 2 13 = Fan Demand	R/W
Max 1 Source 2	Sets the Source for Input 2 of Maximum Function 1 Default: Cooling Stage 1 Note: DI1 Priority Level / DI2 Priority Levels sets the input to use Parameter 736 Priority Level value, when active.	**733**	uint16	0..15 (x1)	0 = Network Value (Reg 538) 1 = Heating Stage 1 2 = Heating Stage 2 3 = Heating Stage 3 4 = Cooling Stage 1 5 = Cooling Stage 2 6 = Cooling Stage 3 7 = Auxiliary Demand 8 = CO2 Demand 9 = VOC Demand 10 = Humidity Demand 11 = Max Function 1 12 = Max Function 2 13 = Fan Demand 14 = DI1 (UI1) Priority Level 15 = DI2 (UI2) Priority Level	R/W
Max 2 Source 1	Sets the Source for Input 1 of Maximum Function 2 Default: Cooling Stage 1	**734**	uint16	0..13 (x1)	0 = Network Value (Reg 538) 1 = Heating Stage 1 2 = Heating Stage 2 3 = Heating Stage 3 4 = Cooling Stage 1 5 = Cooling Stage 2 6 = Cooling Stage 3 7 = Auxiliary Demand 8 = CO2 Demand 9 = VOC Demand 10 = Humidity Demand 11 = Max Function 1 12 = Max Function 2 13 = Fan Demand	R/W

Max 2 Source 2	Sets the Source for Input 2 of Maximum Function 2 Default: CO2 Demand Note: DI1 Priority Level / DI2 Priority Levels sets the input to use Parameter 736 Priority Level value, when active.	**735**	uint16	0..15 (x1)	0 = Network Value (Reg 538) 1 = Heating Stage 1 2 = Heating Stage 2 3 = Heating Stage 3 4 = Cooling Stage 1 5 = Cooling Stage 2 6 = Cooling Stage 3 7 = Auxiliary Demand 8 = CO2 Demand 9 = VOC Demand 10 = Humidity Demand 11 = Max Function 1 12 = Max Function 2 13 = Fan Demand 14 = DI1 (UI1) Priority Level 15 = DI2 (UI2) Priority Level	R/W
Priority Level	Max Function Output Level when Source 2 = DI1/DI2 and the corresponding digital input is active.	**736**	uint16	0..15 (x1)	0..100 (Default 0)	R/W

FAN CONTROL						
Fan Control Source	Sets the Temperature Source for the Fan Control Function.	**740**	uint16	0..12 (x1)	0 = Network Value (Reg 538) 1 = Heating Stage 1 2 = Heating Stage 2 3 = Heating Stage 3 4 = Cooling Stage 1 5 = Cooling Stage 2 6 = Cooling Stage 3 7 = Auxiliary Demand 8 = CO2 Demand 9 = VOC Demand 10 = Humidity Demand 11 = Max Function 1 (Default) 12 = Max Function 2	R/W
Min Fan Speed	Sets the Minimum Fan Speed for EC Fans	**741**	uint16	0..100 (x1)	0..100% (Default 15%)	R/W
Fan Speed 1	Sets the Fan Speed 1 for EC Fans (when source 33%)	**742**	uint16	0..100 (x1)	0..100% (Default 33%)	R/W
Fan Speed 2	Sets the Fan Speed 2 for EC Fans (when source 66%)	**743**	uint16	0..100 (x1)	0..100% (Default 66%)	R/W
Fan Speed 3	Sets the Fan Speed 3 for EC Fans (when source 99%)	**744**	uint16	0..100 (x1)	0..100% (Default 100%)	R/W
Fan Mode	Sets the EC Fan Mode. Continuous Mode scales the fan demand based on the source and Fan Speed 1/2/3 settings. In Stepped mode the fan speed steps according to Fan Speed 1/2/3 settings.	**745**	uint16	0..1 (x1)	0 = Continuous Mode (Default) 1 = Stepped Mode	R/W
Fan Off Mode	Configures if the Fan is running at minimum level or is off when the fan control demand is at 0%. 1 - Minimum Speed: Running at Minimum Speed at Occupied and UnOccupied (0% in OFF mode). 2 - Minimum Occupied: Running at Min Speed in Occupied Only	**746**	uint16	0..2 (x1)	0 = Off (Default) 1 = Minimum Speed 2 = Minimum Occupied	R/W
Fan Off Delay	Switch OFF delay when the source demand drops to 0 (and Fan Off Mode is set to Off)	**747**	uint16	0..600 (x1)	0..600 seconds (Default 0)	R/W
Fan Start-Up Delay	Fan Start-Up when the source demand increases above 0%. During the delay the fan runs at Fan Speed 1 setting.	**748**	uint16	0..600 (x1)	0..600 seconds (Default 10)	R/W
Fan Level Override	Current Fan Level that can be set from the touchscreen or network (last command prevails). Note: If Fan Levels = 0-1-A, options 2, 3 and 4 override to Automatic control. Note: If Fan Levels = 0-1-2-A, then Level 2 overrides to Speed 3. Both 3 and 4 override to Automatic control. From V1.54 onwards will return automatically to 5 after override.	**749**	unit16	0..5	0 = Off 1 = Speed1 2 = Speed2 3 = Speed3 4 = Auto 5 = No Override	R/W
Fan Levels	Set the Fan Levels for the network override and for the touch button operation	**750**	uint16	0..2	0 = 0-1-A 1 = 0-1-2-A 2 = 0-1-2-3-A (Default)	R/W
Stepped Fan Y Delay	Set the switching delay between Fan Speeds 1, 2 and 3 for the Y Analogue Outputs when Fan Mode = Stepped.(from Fw 1.52)	**751**	uint16	0..30 (x1)	0..30 seconds (Default 0)	R/W
xCR13: Fan Relay Delay	Delay between Fan Level Relays switching on the xCR13 Controllers	**751**	uint16	0..30 (x1)	0..30 seconds (Default 0)	R/W
Max Auto Fan Speed	Maximum Fan Speed in Automatic Control Mode (from Fw 1.57)	**752**	uint16	0..100 (x1)	0..100% (Default 100%)	R/W

AIR QUALITY CONTROL						
CO2 Control Source	Sets the Source for the CO2 Control Note: If set to UI1/UI2, then 0..10V is scaled to measurement according to UI Input Min/Max scaling parameters 523-526.	**760**	uint16	0..3 (x1)	0 = Network Value (Reg 539) 1 = Builti-In CO2 (Default) 2 = UI1 - 0..10V 3 = UI2 - 0..10V	R/W
CO2 Setpoint	CO2 Control Setpoint	**761**	uint16	0..10000 (x1)	0..10,000 (Default 750)	R/W
CO2 PB	CO2 Control Proportional Band	**762**	uint16	1..10000 (x1)	1..10,000 (Default 500)	R/W
CO2 IA	CO2 Control Integral Action Time (Set to 0 to disable)	**763**	uint16	0..3600 (x1)	0..3600s (Default 0s)	R/W
CO2 Setpoint Setback	CO2 Control Setpoint SetBack in Unoccupied mode	**764**	uint16	0..2000 (x1)	0..2,000 (Default 0)	R/W
CO2 Control Mode	CO2 Control Loop Control Mode	**765**	uint16	0..1 (x1)	0 = Reverse 1 = Direct)	R/W
VOC Setpoint	VOC Control Setpoint	**770**	uint16	0..500 (x1)	0..500 (Default 100)	R/W
VOC PB	VOC Control Proportional Band	**771**	uint16	1..500 (x1)	1..500 (Default 100)	R/W
VOC IA	VOC Control Integral Action Time (Set to 0 to disable)	**772**	uint16	0..3600 (x1)	0..3600s (Default 0s)	R/W

HUMIDITY CONTROL						
Humidity Source	Sets the Source for the Humidity Control. Note: If set to UI1/UI2, then 0..10V is scaled to measurement according to UI Input Min/Max scaling parameters 523-526.	**780**	uint16	0..3 (x1)	0 = Network Value (Reg 539) 1 = Built-In Humidity (Default) 2 = UI1 - 0..10V 3 = UI2 - 0..10V	R/W
Humidity Setpoint	Humidity Control Loop Setpoint	**781**	uint16	0..100 (x1)	0..100% (Default 50%)	R/W
Humidity PB	Humidity Control Proportional Band	**782**	uint16	1..100 (x1)	1..100% (Default 20)	R/W
Humidity IA	Humidity Control Integral Action Time (Set to 0 to disable)	**783**	uint16	0..3600 (x1)	0..3600s (Default 0s)	R/W
Humidity Mode	Humidity Loop Control Mode Default: Humidify (Reverse)	**784**	uint16	0..1 (x1)	0 = Humidify (Reverse) 1 = De-Humidify (Direct)	R/W
Humidity Interlock	Enables Cooling Stage 2 Interlock on High Humidity	**785**	uint16	0..1 (x1)	0 = Disabled (Default) 1 = Enabled	R/W
Dew Point Range	Dew Point calculation range where the Dew Point based cooling max. position calculates linearly from 100% to 0%	**786**	uint16	0..10 (x1)	0..10 Degrees (Default 4)	R/W
Dew Point Mode	Dew Point Mode Selection	**787**	uint16	0..1 (x1)	0 = On-Off 1 = Proportional (Default)	R/W
Dew Point Offset	Dew Point Offset (from the calculated Dew Point) where the Dew Point based calculated max. position is 0%	**788**	uint16	0..5 (x10)	0..5.0 Degrees (Default 1.0)	R/W

		Modbus Register / BACnet Property	**MODBUS HOLDING REGISTER - FUNCTION CODES 03, 06, 16**			
ROOM STATUS (from Fw1.80)						
Clean	Clean My Room Button Status/Override	**660**	int16	0..1 (x1)	0 = Off 1 = On	R/W
DoNotDisturb	Do Not Disturb Button Status/Override	**660**	int16	0..1 (x1)	0 = Off 1 = On	R/W
SETPOINT RESETS						
Multi-Stage Nominal Setpoint	Multi-Stage Control Loop Nominal Setpoint (SPnom)	**701**	uint16	0..2120 (x10)	0.0..212.0, Default 21.0	R/W
Calculated Multi-Stage Setpoint	Calculated Setpoint (Nominal Network Setpoint + User Adjustment) for Multi-Stage Control Loop **Note:** Read/write Modbus parameter. Writing to Reg420 sets 701 Nominal Setpoint to this value, and the user adjustment Reg790 is reset to 0.	**420**	int16	-32000..32000 (x10)	-3200.0..3200.0	R/W
User Setpoint Adjustment	Current User Setpoint Adjustment (Run time memory)	**790**	int16	-300..0..300.0 (x10)	Param 703 to Param 704	R/W
Aux Setpoint	Auxiliary Control Loop Setpoint	**715**	uint16	0..9999 (x10)	0.0..999.9 (Default 21.0)	R/W

Calculated Aux Setpoint	Calculated Aux Setpoint (Nominal Network Setpoint + User Adjustment) for Auxiliary Control Loop **Note:** Read/write Modbus parameter. Writing to Reg421 sets 715 Nominal Setpoint to this value, and the user adjustment is reset to 0.	**421**	int16	-32000..32000 (x10)	-3200.0..3200.0	R/W
Aux Setpoint Adjustment	Current Aux Loop User Setpoint Adjustment for Aux Loop (Run time memory)	**791**	int16	-300..0..300.0 (x10)	Param 717 to Param 718	R/W

SYSTEM AND COMMUNICATION SETTINGS						
		Modbus Register / BACnet Property	**MODBUS HOLDING REGISTER - FUNCTION CODES 03, 06, 16**			
Parameter	**Description**		**Type**	**Data Range (multiplier)**	**Value Range / Enumerations**	**R/W**
Address	Modbus Address BACnet MAC Address	**800**	uint16	1..247 (x1) 1..127 (x1)	Modbus: 1..247 BACnet: 1..127	R/W
Baud Rate	Baud Rate	**801**	uint16	0..5	0 = 9600 (default) 1 = 19200 2 = 38400 3 = 57600 4 = 76800 5 = 115200	R/W
Modbus Parity	Modbus Parity	**802**	uint16	0..2	0 = None (default) 1 = Odd 2 = Even	R/W
Modbus Stopbits	Modbus Stopbits	**803**	uint16	0..1	0 = 1 Stop Bit (default) 1 = 2 Stop Bits	R/W
Soft Reset	Soft Reset	**810**	uint16	0..1	0 = Normal 1 = Reset	R/W
Last Reset	Last Controller Reset Status	**955**	unit	0..5	0 = Powerup, 1 = Backup, 2 = Watchdog, 3 = Software, 4 = Hardware Pin	R
Persist	Persist (Store Parameters in Non-Volatile Memory after changes) **NOTE: DO NOT WRITE FREQUNTLY TO THIS REGISTER. IT IS ONLY APPLIED AFTER CONFIGURATION CHANGES.**	**811**	uint16	0..1	0 = Normal 1 = Persist	R/W
Reload Defaults	Reload Defaults (NOTE: Resets all settings to factory defaults)	**812**	uint16	0..1	0 = Normal 1 = Factory Defaults	R/W
Service Pin	Service Pin (BACnet Only)	**813**	uint16	0..1	0 = Normal 1 = Service Pin	R/W
Language Pack Enable	Enables the Language Pack (using language pack it is possible to change the user text entries on the screen)	**814**	uint16	0..1	0 = English 1 = Language Pack Enabled	R/W
Logo Timer	Time after which the Logo is displayed on the Display after background level is activated. Set to 0 to disable the logo.	**815**	uint16	0..255 (x1)	1..255 seconds 0 = Logo Disabled	R/W
Firmware Version	Firmware Version	**820**	uint16	N/A	N/A	R
Serial Number	Serial Number	**821**	uint16	N/A	N/A	R
Date Code	Date Code	**822**	uint16	N/A	N/A	R
Product ID	Product ID	**823**	uint16	N/A	N/A	R
Device ID	BACnet Device ID. Set to 0 to use Automatically generated ID. Follow change with "Persist" and "Reset".	**825**	unit32	0..4,194,303 (x1)	0..4,194,303	R/W

LORA AUTOMATIC PAYLOAD CONFIGURATION (LORA MODELS ONLY)						
		Modbus Register / BACnet Property	**MODBUS HOLDING REGISTER - FUNCTION CODES 03, 06, 16**			
Parameter	**Description**		**Type**	**Data Range (multiplier)**	**Value Range / Enumerations**	**R/W**
Uplink Register 1	LoraWan Automatic Uplink Payload Register 1. Configure to be the register number to be read in the message. (Default: Temp)	**850**	uint16	1..1000 (x1)	400..1000 (Default 400)	R/W
Uplink Reg 2	LoraWan Automatic Uplink Payload Register 2 (Def: Humidity)	**851**	uint16	1..1000 (x1)	400..1000 (Default 401)	R/W
Uplink Reg 3	LoraWan Automatic Uplink Payload Register 3 (Def: CO2)	**852**	uint16	1..1000 (x1)	400..1000 (Default 402)	R/W
Uplink Reg 4	LoraWan Automatic Uplink Payload Register 4 (Def: VOC)	**853**	uint16	1..1000 (x1)	400..1000 (Default 403)	R/W
Uplink Reg 5	LoraWan Automatic Uplink Payload Register 5 (Def: UI1)	**854**	uint16	1..1000 (x1)	400..1000 (Default 410)	R/W
Uplink Reg 6	LoraWan Automatic Uplink Payload Register 6 (Def: UI2)	**855**	uint16	1..1000 (x1)	400..1000 (Default 411)	R/W
Uplink Reg 7	LoraWan Automatic Uplink Payload Register 7 (Def: Y1)	**856**	uint16	1..1000 (x1)	400..1000 (Default 412)	R/W
Uplink Reg 8	LoraWan Automatic Uplink Payload Register 8 (Def: Y2)	**857**	uint16	1..1000 (x1)	400..1000 (Default 413)	R/W
Uplink Reg 9	LoraWan Automatic Uplink Payload Register 9 (Def: Y3)	**858**	uint16	1..1000 (x1)	400..1000 (Default 414)	R/W
Uplink Reg 10	LoraWan Automatic Uplink Payload Register 10 (Def: Y4)	**859**	uint16	1..1000 (x1)	400..1000 (Default 415)	R/W
Uplink Reg 11	LoraWan Automatic Uplink Payload Register 11 (Def: Calc SP)	**860**	uint16	1..1000 (x1)	400..1000 (Default 420)	R/W
Uplink Reg 12	LoraWan Automatic Uplink Payload Register 12 (Def: Aux SP)	**861**	uint16	1..1000 (x1)	400..1000 (Default 421)	R/W
Write Register 1	LoraWan Packaged Write Payload Register 1. Configure to be the register number to be written. (Default: Nominal SP)	**862**	uint16	1..1000 (x1)	400..1000 (Default 701)	R/W
Write Register 2	LoraWan Packaged Write Payload Register 2. (Def: Aux SP)	**863**	uint16	1..1000 (x1)	400..1000 (Default 681)	R/W
Write Register 3	LoraWan Packaged Write Payload Register 3. (Def: None)	**864**	uint16	1..1000 (x1)	400..1000 (Default 0)	R/W
Write Register 4	LoraWan Packaged Write Payload Register 4. (Def: None)	**865**	uint16	1..1000 (x1)	400..1000 (Default 0)	R/W
Write Register 5	LoraWan Packaged Write Payload Register 5. (Def: None)	**866**	uint16	1..1000 (x1)	400..1000 (Default 0)	R/W
Write Register 6	LoraWan Packaged Write Payload Register 6. (Def: None)	**867**	uint16	1..1000 (x1)	400..1000 (Default 0)	R/W
Transmission Interval	Lora Uplink Message Transmission Interval, minutes	**847**	uint16	1..9 (x1)	0 = 1min 1 = 2min 2 = 3min 3 = 4min 4 = 5min 5 = 6min 6 = 10min (default) 7 = 15min 8 = 30min 9 = 60min	R/W
Lora Version	Reports the Lora Firmware Version	**875**	uint16	1..9999 (x1)	n/a (V2.03 latest as Apr25)	R

MODBUS ONLY REGISTERS COMBO REGISTERS

The following registers are available with Modbus only. The registers combine two parameters to a single 16-bit (2 Bytes) Modbus register.

MODBUS SPECIFIC COMBINATION REGISTERS						
		MODBUS INPUT REGISTERS - FUNCTION CODE 04 MODBUS HOLDING REGISTER - FUNCTION CODES 03, 16				
Parameter	**Description**		**Type**	**Data Range (multiplier)**	**Value Range / Enumerations**	**R/W**
Y1/Y2	Combined 16-Bit Register for Outputs Y1 and Y2. E.g. Y1=0x64 (100%), Y2=0x64 (100%) Register=0x6464 (25700)	**450**	unit16	0..25700 (x1) 0x0000..0x6464	Byte 1:Y1 (0x00..0x64), Byte 2:Y2 (0x00..0x64)	R
Y3/Y4	Combined 16-Bit Register for Outputs Y3 and Y4	**451**	unit16	0..25700 (x1) 0x0000..0x6464	Byte 1: Y3 (0x00..0x64), Byte 2: Y4 (0x00..0x64)	R
Htg/Clg	Combined 16-Bit Register for Heating and Cooling Demands	**452**	unit16	0..25700 (x1) 0x0000..0x6464	Byte 1: Htg (0x00..0x64), Byte 2: Clg (0x00..0x64)	R
Triac1/Triac2	Combined 16-Bit Register for Triac 1 and Triac 2 Demands	**453**	unit16	0..25700 (x1) 0x0000..0x6464	Byte 1: Triac 1 (0x00..0x64) Byte 2: Triac 2 (0x00..0x64)	R
Triac1/Triac2	Combined 16-Bit Register for Triac 3 and Triac 4 Demands	**454**	unit16	0..25700 (x1) 0x0000..0x6464	Byte 1: Triac 1 (0x00..0x64) Byte 2: Triac 2 (0x00..0x64)	R
Device Status	Combined 16-Bit Register for Binary Status of the Device	**455**	unit16	0..25700 (x1)	Bit0 - DI1, Bit1 = DI2, Bit3 = PIR, Bit4 = Relay, Bit5= Boost, Bit6 = Screen Lock	R
Y1 Commission Override	Y1 Commissioning Override Parameter	**690**	uint16	0..3 (x1)	0 = Auto (Default) 1 = Manual Override 2 = 0% 3 = 100%	R/W
Y2 Commission Override	Y2 Commissioning Override Parameter	**691**	uint16	0..3 (x1)		R/W
Y3 Commission Override	Y3 Commissioning Override Parameter	**692**	uint16	0..3 (x1)		R/W
Y4 Commission Override	Y4 Commissioning Override Parameter	**693**	uint16	0..3 (x1)		R/W
TR1 Override	TR1 Commissioning Override Parameter	**694**	uint16	0..3 (x1)	0 = Auto (Default) 1 = Manual Override 2 = 0% 3 = 100%	R/W
TR2 Override	TR2 Commissioning Override Parameter	**695**	uint16	0..3 (x1)		R/W
TR3 Override	TR3 Commissioning Override Parameter	**696**	uint16	0..3 (x1)		R/W
TR4 Override	TR4 Commissioning Override Parameter	**697**	uint16	0..3 (x1)		R/W

Bacnet Protocol Implementation Statement (PICS) and BACnet Objects

The -BAC versions of the controllers come with BACnet MS/TP communication. The following tables describe the PICS (Protocol Implementation Conformance Statement) and BACnet Objects (Standard and Proprietary). The Proprietary Objects are used for the device configuration.

GENERAL INFORMATION			
Date:	Sep 1, 2022		
Vendor Name:	Senticon Ltd		
Vendor ID:	1374		
Product Name:	xCR Smart Room Controller		
Product Models:	TCRxx, QCRxx		
Applications Software Version:	1.0		
Firmware Revision:	1.0.0		
BACnet Protocol Revision	1.19		
Product Description:	Smart Room Controller		
BACnet Standard Device Profile:	BACnet Application Specific Controller (B-ASC)		
BACnet Interoperability Blocks Supported:	Data Sharing - ReadProperty-B (DS-RP-B) Data Sharing - ReadPropertyMultiple-B (DS-RPM-B) Data Sharing - WriteProperty-B (DS-WP-B) Data Sharing - COV-B (DS-COVU-B) Device Management - DynamicDeviceBinding-B (DM-DDB-B) Device Management - DynamicObjectBinding-B (DM-DOB-B) Device Management - DeviceCommunicationControl-B (DM-DCC-B)		
Segmentation Capability:	No		
Data Link Layer Options:	MS/TP Master; Supported Baud 9600/19200/38400/57600/76800/115200		
Device Address Binding:	No static device binding supported		
Networking Options:	None		
Character Sets Supported:	ISO 10646 (UTF-8)		
Gateway Options:	None		
Network Security Options:	Non-Secure Device		
Standard Object Types Supported:	**Object Type:**	**Optional Properties**	**Writeable Properties**
	Analog Value:	Description, COV Increment, Relinquish Default	Present Value COV Increment
	Binary Value:	Description, Inactive_Text, Active_Text	Present Value
	Device Object:	Description Active COV Subscriptions Max Master	Object Identifier Object Name APDU Timeout (0...60000) Number Of APDU Retries (0...10) Max Master (1...127)
	For all supported objects, device does not support CreateObject or DeleteObject. *For Analogue Value objects that are classified as read only, there is the following behaviour:* *- HVAC application overwrites the present value that has been written with the Write Property Service.* *- In this case, no error message will be sent.* *The device application checks the ranges of the Present Value and the COV Increment of the Analogue Objects. For this reason, there is the following behaviour:* *- No error message, if the limits have been exceeded* *- Too high values are set to the range maximum* *- Too small values are set to the range minimum*		

OBJECT TYPE: DEVICE OBJECT				
Object Instance	**Property Identifier**	**Value Range**	**Default Value**	**R/W**
Device[x]	Object Identifier		MAC_Address	R/W
	Object Name	32 chars max.		R/W
	Object_Type		8	R
	System_Status		Status_Operational	R
	Vendor_Name		Senticon Ltd	R
	Vendor_Identifer		1374	R
	Model_Name		xCR	R
	Firmware_Revision		1.0.0	R
	Application_Software_Version		1.0	R
	Protocol_Version		1	R
	Protocol_Revision		19	R
	Protocol_Services_Supported		See General Information	R
	Protocol_Object_Types_Supporte		See General Information	R
	Object_List		See Objects List	R
	Max_APDU_Length_Accepted		480	R
	Segmentation_Supported		No	R
	APDU_Timeout		6000 ms	R/W
	Number_Of_APDU_Retries		3	R/W
	Max_Master		127	R/W
	Device_Address_Binding			R
	Database_Revision		0	R
	Property_List			R

OBJECT TYPE: ANALOGUE VALUE						
Object Instance	**Object Name**	**Value Range**	**Relinquish_Default**	**Units**	**COV Increment**	**R/W**
AV(0)	Temperature	-40.0..120.0°C / -40.0..248.0°F	-	DEGREES_CELCIUS or DEGREES_FAHRENHEIT	0.0..100 (Default 0.5)	R
AV(1)	Humidity	0...100.0	-	RELATIVE_HUMIDITY	0.0..100 (Default 5)	R
AV(2)	CO2	0...10,000	-	PARTS_PER_MILLION	0.0..100 (Default 50)	R
AV(3)	VOC	0..1,000	-	NO_UNITS	0.0..100 (Default 10)	R
AV(4)	UI1	-40.0..120.0°C / -40..248°F 0..100.0%	-	DEGREES_CELCIUS or DEGREES_FAHRENHEIT or NO_UNITS	0.0..100 Default 1.0	R
AV(5)	UI2	-40.0..120°C / -40..248°F 0..100.0%	-	DEGREES_CELCIUS or DEGREES_FAHRENHEIT or NO_UNITS	0.0..100 Default 1.0	R
AV(6)	Y1	0.0..100.0%	-	PERCENT	5	R/W
AV(7)	Y2_RL1	0.0..100.0%	-	PERCENT	5	R/W
AV(8)	Y3_RL2	0.0..100.0%	-	PERCENT	5	R/W
AV(9)	Y4_RL3	0.0..100.0%	-	PERCENT	5	R/W
AV(10)	Setpoint_Main	0.0..212.0	Nonvol_Setpoint	NO_UNITS	n/a	R/W
AV(11)	Setpoint_Aux	0.0..212.0	Nonvol_Setpoint	NO_UNITS	n/a	R/W
AV(12)	Setpoint_CO2	0...10000.0	Nonvol_Setpoint	PARTS_PER_MILLION	n/a	R/W
AV(13)	Setpoint_VOC	0..500.0	Nonvol_Setpoint	NO_UNITS	n/a	R/W
AV(14)	Setpoint_Humidity	0..100.0	Nonvol_Setpoint	RELATIVE_HUMIDITY	n/a	R/W
AV(15)	Fan_Speed	0..4.0	Nonvol_FanSpeed	NO_UNITS	1	R/W
AV(16)	Operating_Mode (Occupied/Unocc/Off)	0..2.0	Nonvol_OpMode	NO_UNITS	1	R/W
AV(17)	Network_Decimal	-999.0..999.0	Nonvol_Setpoint	NO_UNITS	n/a	R/W
AV(18)	Network_Integer	0..65535.0	Nonvol_Setpoint	NO_UNITS	n/a	R/W
AV(19)	Triac1_PWM	0..100	-	PERCENT	5	R/W

AV(20)	Triac2_PWM	0..100	-	PERCENT	5	R/W
AV(21)	Triac3_PWM	0..100	-	PERCENT	5	R/W
AV(22)	Triac4_PWM	0..100	-	PERCENT	5	R/W
AV(23)	DZ_Unocc_HTG	0..30.0	Nonvol_Setpoint	DEGREES_CELCIUS or DEGREES_FAHRENHEIT or NO_UNITS	n/a	R/W
AV(24)	DZ_Unocc_CLG	0..30.0	Nonvol_Setpoint		n/a	R/W
AV(25)	DZ_Occ_HTG	0..30.0	Nonvol_Setpoint	DEGREES_CELCIUS or DEGREES_FAHRENHEIT or NO_UNITS	n/a	R/W
AV(26)	DZ_Occ_CLG	0..30.0	Nonvol_Setpoint		n/a	R/W
AV(27)	Setpoint_Frost	0.0..60.0	Nonvol_Setpoint	NO_UNITS	n/a	R/W

NOTE: Priority Input 16 is reserved for internal value. If COV increment is set to 0.0 (default), the COV is disabled.

NOTE: Writing to AV6-AV9, AV19-AV22 Priority Inputs 1-15 overrides the current value. Set Pri Inputs 1-15 to 'null' to release back to automatic control.

NOTE: R = Read Only, R/W = Read/Write

NOTE:AV23/AV24 available from Fw. 1.52 onwards.

OBJECT TYPE: BINARY VALUE					
Object Instance	**Object Name**	**Description**	**Present Value Range / Active - Inactive Tex**	**Relinquish_Default**	**R/W**
BV(0)	DI_1	Digital Input 1 Status	0: InActive (Off) 1: Active (On)	Binary_Inactive	R
BV(1)	DI_2	Digital Input 2 Status	0: InActive (Off) 1: Active (On)	Binary_Inactive	R
BV(2)	PIR	PIR Movement Sensor Status	0: InActive (Off) 1: Active (On)	Binary_Inactive	R
BV(3)	DO_1	Digital Output (Relay) Status	0: InActive (Off) 1: Active (On)	Binary_Inactive	R/W
BV(4)	Boost	Boost Button Status (Active / non-active)	0: InActive (No Boost) 1: Active (Boost)	Binary_Inactive	R
BV(5)	Cooling_Mode	Cooling Mode Override for Heating Stage 1 (Heating/Cooling)	0: InActive (Heating) 1: Active (Cooling)	Binary_Inactive	R/W
BV(6)	Screen_Lock	Locks / Unlocks Screen	0: InActive (Unlocked) 1: Active (Locked)	Binary_Inactive	R/W
BV(7)	Clean	Clean Button Status (Active / non-active)	0: InActive (No Boost) 1: Active (Boost)	Binary_Inactive	R
BV(7)	Do Not Disturb	Do Not Disturb Button Status (Active / non-active)	0: InActive (No Boost) 1: Active (Boost)	Binary_Inactive	R

NOTE: Priority Input 16 is reserved for Internal Value.

NOTE: BV(6) - Set Priority Inputs 1-15 to 'null' to allow the user to unlock/lock the device.

PROPRIETARY OBJECT **OBJECT NAME / TYPE: "CONFIGx" / 128**
The devices have six instances of proprietary Device Configuration objects split as with the configuration tools; Cfg_IO_1, Cfg_IO_2, Cfg_Calibration, Cfg_Display, Cfg_Control_1, Cfg_Control_2, Cfg_System. The devices can be fully configured using the properties of these configuration objects. Full list of available properties are listed in the *Device Setup and Modbus/BACnet Communication* section tables.

In addition to the generic parameters, the BACnet AV and BV objects have proprietary property to enable COV (Unsubscribed COV) function. For the AV objects the COV increment can be changed from the defaults. For the BV objects data is transmitted when the state changes.

NOTE: Enabling COV increases network load as the messages are broadcast to all devices. For efficient network performance limit the number of COV objects to minimal and configure routers to allow broadcasts only on the subnets.

BACNET COV OBJECT SETTINGS						
Parameter	**Description**	**BACnet Property**	**Type**	**Data Range (multiplier)**	**Value Range / Enumerations**	**R/W**
AVx COV	AV Object COV Enable Flag x = AV Object Number (AV0..AV9, A15..AV16, AV19..AV22)	**100x**	uint16	0..1(x1)	0 = COV Disabled 1 = COV Enabled	R/W

BVx COV	BV Object COV Enable Flag x = BV Object Number (BV0..BV4)	**110x**	uint16	0..1(x1)	0 = COV Disabled 1 = COV Enabled	R/W

Dimensions and Installation

The devices typically mounted on the flat wall surfaces or on the junction boxes. The enclosure has 56/60mm screw distance for standard mounting boxes.

Installation Notes:

- Follow the diagram below to open the enclosure to access the mounting holes and the wiring terminals.
- Install the sensors away from the sources of heat and cool e.g. from direct sunlight or cold external walls.
- Install the sensors at 120-150 cm height for optimal performance.
- For correct movement (PIR) sensor operation consider the location of the sensor carefully.
- Make sure that the cable entries and junction boxes are sealed from air flows. This is the most common reason for inaccuracies in temperature measurement.
- Do not install any device right above or any distance below. These can block the airflow reducing the measurement accuracy and produce heat causing inaccuracies in temperature measurement.
- Bring the cables through the dedicated hole (black area) marked on the dimensions drawing.
- If surface mounted cable is required to be used, the top of the enclosure (center) has a thin wall section that can be cut.

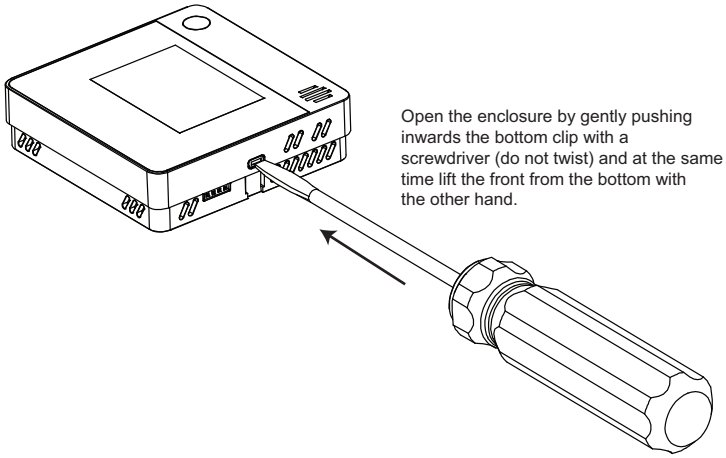

DIMENSIONS (xCR10 and xCR12 SERIES)

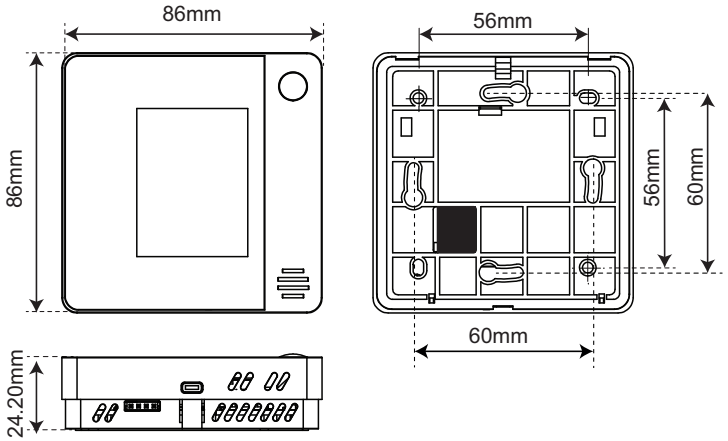
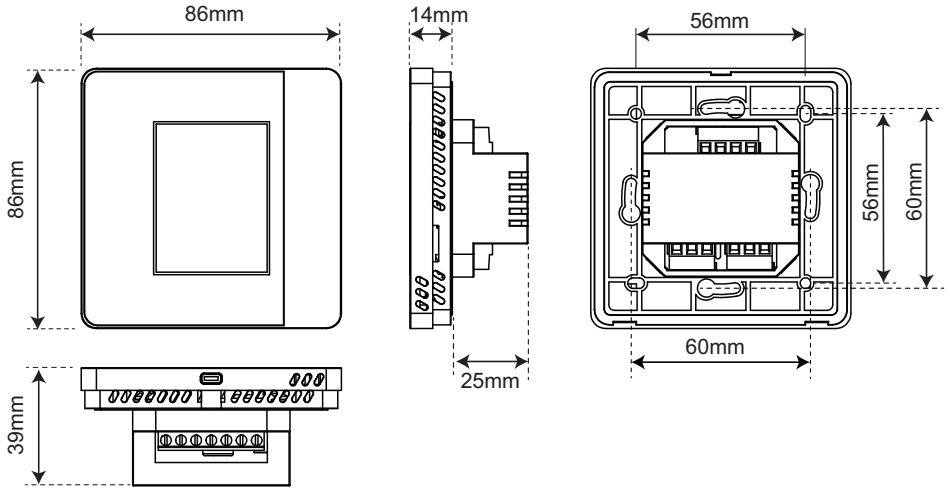
DIMENSIONS (xCR12/xCR13/xCR14/xCR15 SERIES)